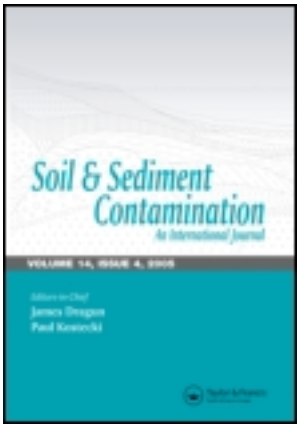

Soil and Sediment Contamination: An International Journal
Publication details, including instructions for authors and subscription information:
http://www.tandfonline.com/loi/bssc20

Development of a Distributed Watershed Contaminant Transport, Transformation, and Fate (CTT&F) Sub-model

Billy Johnson [a], Zhonglong Zhang [b], Mark Velleux [c] & Pierre Julien [d]

[a] Environmental Laboratory, U.S. Army Engineer Research and Development Center, Vicksburg, MS, USA

[b] SpecPro, Vicksburg, MS, USA

[c] HydroQual Inc., Mahwah, NJ, USA

[d] Department of Civil Engineering, Colorado State University, Fort Collins, CO, USA

Available online: 29 Aug 2011

To cite this article: Billy Johnson, Zhonglong Zhang, Mark Velleux & Pierre Julien (2011): Development of a Distributed Watershed Contaminant Transport, Transformation, and Fate (CTT&F) Sub-model, Soil and Sediment Contamination: An International Journal, 20:6, 702-721

To link to this article: http://dx.doi.org/10.1080/15320383.2011.594111

Soil and Sediment Contamination, 20:702–721, 2011

ISSN: 1532-0383 print / 1549-7887 online
DOI: 10.1080/15320383.2011.594111

Development of a Distributed Watershed Contaminant Transport, Transformation, and Fate (CTT&F) Sub-model

BILLY JOHNSON,[1] ZHONGLONG ZHANG,[2]
MARK VELLEUX,[3] AND PIERRE JULIEN[4]

[1]Environmental Laboratory, U.S. Army Engineer Research and Development Center, Vicksburg, MS, USA
[2]SpecPro, Vicksburg, MS, USA
[3]HydroQual Inc., Mahwah, NJ, USA
[4]Department of Civil Engineering, Colorado State University, Fort Collins, CO, USA

CTT&F is a physically based, spatially distributed watershed contaminant transport, transformation, and fate sub-model designed for use within existing hydrological modeling systems. To describe the fate of contaminants through landscape media as well as spatial variations of contaminant distributions, physical transport and transformation processes in CTT&F are simulated for each cell in the model and routed to the watershed outlet. CTT&F simulates contaminant erosion from soil and transport across the land surface by overland flow. The model also simulates contaminant erosion from stream bed sediment and transport through channels in addition to transport of contaminants inputs by overland flow. CTT&F can simulate solid (granular) contaminant transport and transformation, including partitioning between freely dissolved, dissolved organic carbon (DOC) bound, and particle-sorbed phases. To demonstrate model capabilities, CTT&F was coupled with an existing distributed hydrologic model and was tested and validated to simulate RDX and TNT transport using two experimental plots. These experiments examined dissolution of solid contaminants into the dissolved phase and their subsequent transport to the plot outlet. Model results were in close agreement with measured data. Such a model provides information for decision makers to make rational decisions relevant to the fate of toxic compounds.

Keywords Watershed, runoff, sediment, distributed model, contaminant transport, transformation, explosives

1. Introduction

1.1. Background

The U.S. military operates munitions test and training ranges covering tens of millions of acres of land and waters throughout the United States (CPEO, 2002). Many active and formerly used Defense sites (FUDS) have soil, sediment, surface water, and groundwater

Address correspondence to Dr. Billy E. Johnson, 3909 Halls Ferry Road, Vicksburg, MS, 39180. E-mail: Billy.E.Johnson@usace.army.mil

environments contaminated with explosives as a result of munitions fired, dropped, and disposed of on those ranges (Brannon and Myers, 1997; Brannon and Pennington, 2002). When a conventional explosive munition detonates, it releases a large variety of chemical compounds and metals into the environment. Solid particles ranging in size from small to large (up to the diameter of the projectile) may be deposited on the soil surface (Pennington et al., 2005; Jenkins et al., 2006). At open burn/open detonation and explosive, ordnance, and demolition sites, RDX, HMX, TNT, NG, aDNT, and DNT can be found (Clausen, 2005), which are of particular concern due to their potential toxicity to aquatic organisms and risk to human health. A discussion of explosive compounds expected for different types of ranges can be found in Clausen et al. (2004). Another concern is heavy metals such as lead, cadmium, chromium, nickel, copper, and barium (CPEO, 2002). Clausen and Korte (2009) reported that small arms firing ranges at military training facilities can have enormous heavy metal burdens on soils.

Once introduced into the environment, rainfall encountering these chemical compounds and metals can partially dissolve and thus may migrate with the infiltrating water deeper into the soil or as surface runoff. Any remaining dissolved materials may react with the soil matrix and adsorb onto soil particles and/or adsorb to dissolved organic carbon (DOC). In a select range assessment detection of one component of Comp B, RDX, has been observed in groundwater on military training ranges (USEPA, 1997) and thus necessitates continued vigilance in regards to monitoring and assessing the potential for constituent migration.

Assessing watershed-scale impacts of contaminated sites on water quality is a major component towards determining long-term military installation sustainability. Correspondingly, it is necessary to estimate those quantities and attempt to determine where they migrate. Such needs are increasingly achieved with the development of mathematical models that incorporate the processes of contaminant transport and transformations and the degree to which they are affected by human activities. One of the main characteristics of live fire training range munitions constituent (MC) loading is the spatial variability and its relation to land use. On these sites, contaminant simulation models require a distributed modeling approach because distributed models can account for spatial heterogeneity and allow for more accurate predictions due to changes in the landscape (e.g., topographic, land use, MC distribution, soil texture, etc).

Considerable advances have been made in distributed hydrologic modeling in recent years (Birkinshaw and Ewen, 2000; Ewen et al., 2000; Downer and Ogden, 2004; Velleux et al., 2005). However, modeling the transport and fate of distributed sources and the phase distribution of contaminants at the watershed scale is complex and has not received much attention for military installations and relevant contaminants. In particular, less effort has been devoted to studies simulating dissolution of solid contaminants and their associated multiphase partitioning. The limitations of existing watershed models motivated development of a physically based, distributed source Contaminant Transport, Transformation, and Fate (CTT&F) sub-model by the U.S. Army Engineer Research and Development Center (ERDC). Specifically, CTT&F describes transport and transformation of contaminants through the various landscape media in a watershed. It operates on a cell by cell basis, allowing analyses at each cell within a watershed. Further, CTT&F can be linked to spatially distributed hydrologic models such as GSSHA (Downer and Ogden, 2004), CASC2D (Julien and Saghafian, 1991; Julien et al., 1995; Johnson et al., 2000), TREX (Velleux et al., 2005), and others, assuming that the underlying watershed model provides required hydrological and sediment transport fluxes. In grid-based models, landscape features and other characteristics can be varied spatially among cells and contaminants routed from each source cell and through down-gradient cells from the watershed divide to the outlet. The

distributed, process-oriented structure of CTT&F facilitates identification of critical source areas within the watershed and can give insight to contaminant fate and persistence (Young et al., 1989; Hjelmfelt and Wang, 1999; Yan and Kahawita, 2000; Birkinshaw and Ewen, 2000; Velleux et al., 2005).

1.2. Research and Development Objectives

The objectives of this research were to: (1) describe the algorithms of the CTT&F spatially distributed contaminant transport, transformation, and fate sub-model; and (2) validate contaminant transport and transformation processes by calibration to test plot measurements of RDX and TNT concentrations in runoff. This development effort differs from previous efforts in that it focuses on transport and transformation of contaminants rather than runoff and soil erosion caused by rainfall events. The model can simulate four distinct contaminant phases, three of which are equilibrium (dissolved, bound, and particle-sorbed) and one of which is non-equilibrium (solid granular phase). The expectation is that a model of this type can quantify important transport and transformation processes for multiple contaminants and facilitate assessment of distributed sources, leading to better management of watersheds associated with military installations. The dissolution and transport capabilities are demonstrated by plot studies supported by the U.S. Army Corps of Engineers (USACE) Environmental Quality Technology (EQT) Research Program. Contaminants of concern in this study were TNT and RDX. Although applied for military explosives, CTT&F formulations are general and are applicable to other contaminants as well.

2. Model Development

CTT&F uses physically based governing equations that describe the major physical transport and biochemical processes affecting contaminants in a watershed. The governing equations are based on mass conservation for a differential control volume. Mathematical modeling of contaminant transport processes involves simultaneous solution of governing equations for the water column and the underlying bed. An overview of processes in the CTT&F sub-model is presented in Figure 1, where the system is represented as two compartments: water column (runoff or surface water) and surface soil or sediment.

2.1. Four-Phase Contaminant Partitioning and Distribution

Many contaminants exist in equilibrium between dissolved and sorbed phases in water. Contaminants may also sorb to nonsettling microparticles (colloids) or bind to DOC, so these three phases must be considered for realistic contaminant transport modeling (Gschwend and Wu, 1985; Chapra, 1997). Partitioning reactions are usually fast relative to other environmental processes, and local equilibrium may be assumed to exist between the truly dissolved (aqueous), particle-sorbed, and DOC-bound phases. Equilibrium partitioning of contaminants between phases is described by the partition (distribution) coefficient, concentration and effectiveness of binding agents, and concentration of particles or organic carbon. The distribution coefficient can be used to describe the fraction of total contaminant associated with each phase. Using the equilibrium partitioning approach, the fraction of the

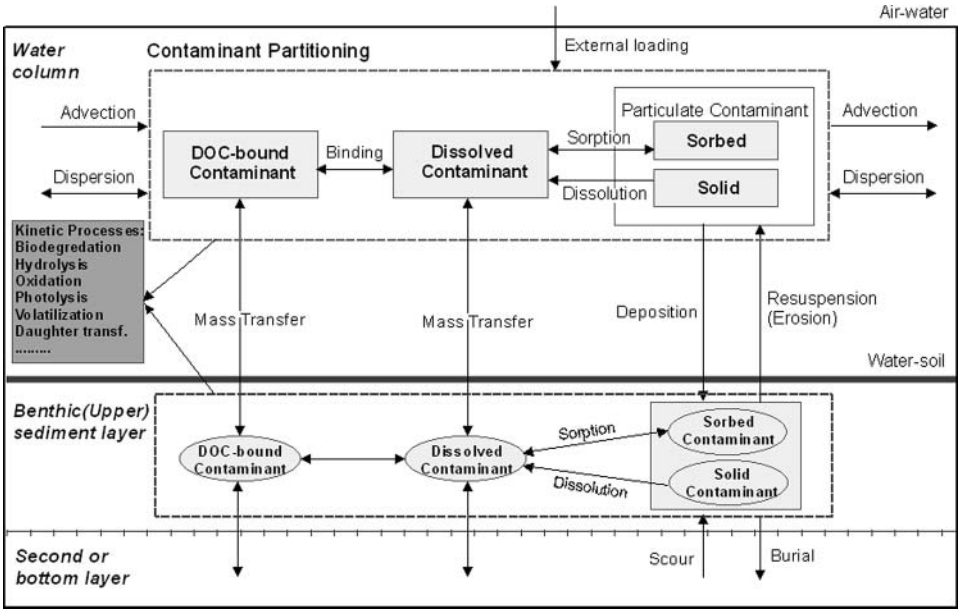

Figure 1. Schematic chart of the key processes of CTT&F sub-model (after Velleux, 2005).

total chemical in dissolved, bound, and sorbed phases can be expressed as (Chapra, 1997):

$$f_d = \frac{1}{1 + k_b C_{DOC} + \sum k_{pn} C_{pn}} \tag{1a}$$

$$f_b = \frac{k_b C_{DOC}}{1 + k_b C_{DOC} + \sum k_{pn} C_{pn}} \tag{1b}$$

$$f_{pn} = \frac{k_{pn} C_{pn}}{1 + k_b C_{DOC} + \sum k_{pn} C_{pn}} \tag{1c}$$

where: f_d = fraction of total contaminant in dissolved phase; f_b = fraction of total contaminant in DOC-bound phase; f_{pn} = fraction of total contaminant in sorbed phase associated with particle n; k_b = DOC binding coefficient [L^3/M]; k_{pn} = distribution coefficient [L^3/M]; C_{DOC} = DOC concentration [M/L^3]; and C_{pn} = concentration of particle n [M/L^3]. The concentrations of contaminant in each phase are related to the total concentration because the fractions in Equations (1a - c) sum to unity: $f_d + f_b + \sum f_{pn} = 1$.

Adsorption data usually conform to the linear assumption of the distribution coefficient expression over a very restricted solution concentration range. Solid (granular) contaminants that are not sorbed to particles or DOC may exist and are treated as a separate, non-equilibrium phase. Granular contaminants are represented as reactive particles that can dissolve over time and enter solution by a kinetic (rate limited) dissolution process. Once dissolved, the contaminant is then subject to redistribution among the three equilibrium phases. Using this approach, CTT&F accounts for four distinct contaminant phases.

2.2. Generalized Contaminant Transport Equations

Within a watershed, contaminant transport processes can be divided into those acting in upland areas (the overland plane) and those in streams (the channel network). These processes are described using the advection-dispersion equation (ADE). For runoff and surface water, the most important processes are advection, dispersion, infiltration, erosion, deposition, and mass transfer between the water column and underlying surface soil or sediment (the bed). Additional terms are included to account for other contaminant mass transfer and transformation processes as well as point sources and sinks. Lateral inflow and outflow terms are added to account for mass transfer when runoff and surface water move between the overland plane and channel network.

For surface soil and sediment, the most important processes are erosion, deposition, and mass transfer between overlying water and the bed. Similarly, additional terms account for any other relevant contaminant mass transfer and transformation processes in the bed. Beyond the transport of particles and sorbed contaminants by erosion and deposition, the bed plays an important role in contaminant transport because dissolved and bound contaminants can migrate through the bed by infiltration, transmission loss, or other porewater or gradient-driven processes.

Interaction of surface water and the upper bed are illustrated in Figure 2. Governing equations for the total concentration of contaminants are expressed in 2-dimensional form for the overland plane and in 1-dimensional form for stream channels as follows (Johnson and Zhang, 2006):

Overland Runoff (2D):

$$\frac{\partial C_T^r}{\partial t} + u_x \frac{\partial C_T^r}{\partial x} + u_y \frac{\partial C_T^r}{\partial y} - \frac{1}{h}\frac{\partial}{\partial x}\left(hD_x \frac{\partial C_T^r}{\partial x}\right) - \frac{1}{h}\frac{\partial}{\partial y}\left(hD_y \frac{\partial C_T^r}{\partial y}\right)$$
$$= -\frac{f}{h}(f_d + f_b)C_T^r + \frac{k_e}{h}(f_d + f_b)(C_{T2}^r - C_T^r) + \frac{1}{h}\sum_1^N f_{pn}\left(v_r C_{T2}^r - v_{se} C_T^r\right) + \Sigma S_k \tag{2}$$

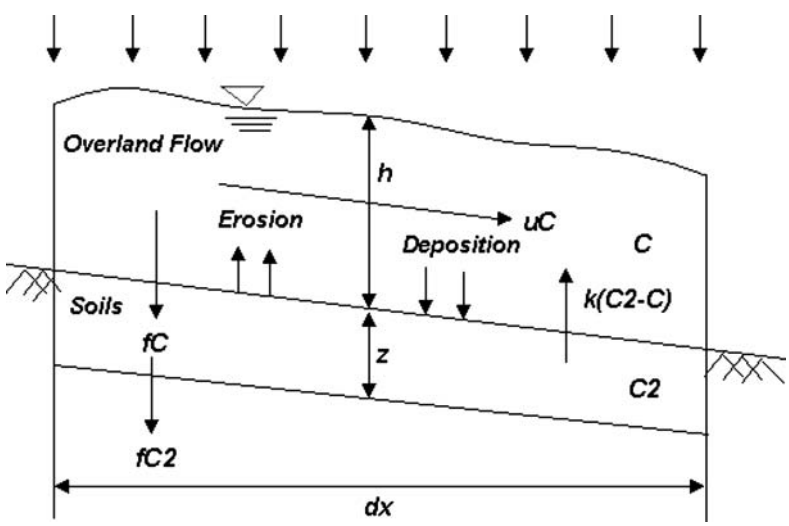

Figure 2. Conceptual transport processes in overland flow and upper soil layer.

Upper soil:

$$\frac{\partial C_{T2}^r}{\partial t} = \frac{f}{z}(f_d + f_b)(C_T^r - C_{T2}^r) - \frac{k_e}{z}(f_d + f_b)(C_{T2}^r - C_T^r) - \frac{1}{z}\sum_1^N f_{pn}\left(v_r C_{T2}^r - v_{se} C_T^r\right) + \Sigma S_k \quad (3)$$

Channel Flow (1D):

$$\frac{\partial C_T^w}{\partial t} + \frac{Q}{A}\frac{\partial C_T^w}{\partial x} - \frac{1}{A}\frac{\partial}{\partial x}\left(AD_x\frac{\partial C_T^w}{\partial x}\right) = \frac{q_l}{A}\left(C_T^r - C_T^w\right) + \frac{1}{h}\sum_1^N f_{pn}\left(v_r C_{T2}^w - v_{se} C_T^w\right) + EA_s(f_d + f_b)\left(C_{T2}^w - C_T^w\right) + \sum S_k \quad (4)$$

Upper sediment:

$$\frac{\partial C_{T2}^w}{\partial t} = \frac{1}{z}\sum_1^N f_{pn}\left(v_{se} C_T^w - v_r C_{T2}^w\right) - EA_s(f_d + f_b)\left(C_{T2}^w - C_T^w\right) + \sum S_k \quad (5)$$

where C_T^r, C_T^w = total contaminant concentration in surface water [M/L^3]; C_{T2}^r, C_{T2}^w = total contaminant concentration in the bed [M/L^3]; h = surface water depth [L]; z = bed layer thickness [L]; r = net precipitation rate [L/T]; u_x and u_y = depth-averaged x- and y-direction velocity [L/T]; D_x, D_y = contaminant dispersion coefficient in the x- or y-direction [L^2/T]; k_e = effective mass transfer coefficient between surface water and the bed [L/T]; v_r = erosion (resuspension) velocity [L/T]; v_{se} = effective settling (deposition) velocity [L/T]; A = cross-sectional area of channel flow [L^2]; Q = total channel discharge [L^3/T]; and q_l = lateral flow into or out of the channel [L^2/T]; E = vertical diffusion coefficient [L^2/T]; A_s = interfacial area [L^2]; and z = depth of surficial bed layer; and ΣS_k = total contaminant transformation flux, positive indicates a source and negative a sink [M/L^3/T]. The superscripts "r" and "w" denote overland runoff and channel surface water, respectively.

Previous transport equations assume that contaminants either attach to soil particles or partition to water and DOC when wet. Contaminants can be deposited from the air and applied on the surface in a solid form. As such contaminant solid particles are carried by runoff and surface water and transported through erosion and deposition processes. It is necessary to track mass of contaminant solids within the watershed. The sediment transport equation assumes the types of "solids" variables are conservative, which indicates that no existing kinetic functions are available or applicable. Therefore, mineralization, dissolution, or other transformation processes need to be considered and applied to contaminant solids. CTT&F performs a mass balance for the concentration of contaminant solids on grid cells based upon specified transport processes, along with special kinetics processes. Mass balance computations are performed in soil/sediment layers as well as the water columns.

2.3. Contaminant Transformations

Beyond partitioning, the fate of many contaminants is influenced by mass transfer and transformation processes, including biodegradation, hydrolysis, oxidation (or reduction), photolysis, volatilization, and dissolution. Contaminants may also be linked through sequences of reactions. The importance of these processes depends on the contaminant of

interest and the environmental setting. CTT&F can simulate any combination of processes, including reaction sequences and yields where one contaminant undergoes a reaction and is converted to another chemical simulated. Mass transfer and transformation processes are represented as source or sink terms (ΣS_k) as noted in Equations (2) - (5). In their most basic form, they are represented as first-order processes that depend only on the concentration of the contaminant undergoing reaction and can be applied to the water column or the bed:

$$\frac{\partial C_T}{dt} = \sum S_k = \left(K_{bio} + K_{hyd} + K_{oxi} + K_{pht} + K_{vol} + K_{dsl}\right) C_T \tag{6}$$

where: K_{bio} = biodegradation rate [1/T]; K_{hyd} = hydrolysis rate [1/T]; K_{oxi} = oxidation rate [1/T]; K_{pht} = photolysis rate [1/T]; K_{vol} = volatilization rate [1/T]; K_{dsl} = dissolution rate [1/T]; C_T = total contaminant concentration (water column, soil or sediment) [M/L^3]. As shown below, transformations can also be described as second-order processes in conjunction with parameters to describe environmental conditions such as oxidant or microorganism concentrations, pH, or solubility, allowing greater specificity with respect to contaminant phases and conditions controlling a reaction.

2.3.1. Biodegradation. Biodegradation is transformation of contaminants by microbial activity and can be described as a second-order process in which the overall (first-order) rate is computed from rates for each contaminant phase (e.g. dissolved or particle-sorbed) and the concentration of microorganisms:

$$K_{bio} = \sum_j k_{bio_j} \left[C_{m,j}\right]_j f_j \tag{7}$$

where: k_{bio} = second-order biodegradation rate for phase j [L^3/M/T]; f_j is fraction of total chemical in phase j [dimensionless], and C_{mj} = concentration of microorganisms acting on phase j [M/L^3].

2.3.2. Hydrolysis. Hydrolysis is contaminant transformation by reaction with water and can be described as second-order processes for acidic and basic conditions and a first-order process for neutral conditions for each contaminant phase:

$$K_{hyd} = \sum_j \left(k_{acid_j} \left[H^+\right] f_j + k_{neutral_j} f_j + k_{base_j} \left[OH^-\right] f_j\right) \tag{8}$$

where: $k_{acid\,jj}$ = second-order acid hydrolysis rate for contaminant in phase j [L^3/M/T]; $k_{base\,j}$ = second-order base hydrolysis rate for contaminant in phase j [L^3/M/T]; k_{nj} = first-order neutral hydrolysis rate for contaminant in phase j [1/T]; and $[H^+]$, $[OH^-]$ = concentration of hydronium and hydroxide ions, respectively [M/L^3].

2.3.3. Oxidation. Oxidation (or reduction) is transformation of contaminants by electron exchange and can be described as second-order processes for acidic and basic conditions and a first-order process for neutral conditions for each contaminant phase:

$$K_{oxi} = [RO_2] \sum_j k_{oj} f_j \tag{9}$$

where: k_{oj} = second-order net oxidation rate for contaminant in phase j [L^3/M/T]; $[RO_2]$ = oxidant (or reductant) concentration [M/L^3].

2.3.4. Photolysis. The first-order rate coefficient for photolysis can be calculated from the absorption rate and the quantum yield for a contaminant in each phase:

$$K_{pht} = \sum_j k_{aj} \phi_j f_j \tag{10}$$

where: k_{aj} = specific sunlight absorption rate for contaminant in phase j, E/mol-day [E/M/T], and ϕ_j is reaction quantum yield for contaminant in phase j, mol/E [M/E].

2.3.5. Volatilization. Volatilization is the gradient-driven transfer of a contaminant across the air-water interface. The model assumes that only dissolved contaminants can be transported across the interface, and sorption to particulate or DOC reduces volatilization. Volatilization is commonly modeled based on the well-known two-film theory of a gas-liquid transfer velocity. Volatile contaminant concentrations in the atmosphere are often much lower than partial pressures equilibrated with water concentrations. If this concentration is *0*, then volatilization will always cause a loss of contaminant from the water body. In such a case, volatilization reduces to a first-order process with a rate proportional to the conductivity and surface area divided by volume:

$$k_{vlt} = k_v \frac{1}{D} = k_v \frac{A_s}{V} \tag{9a}$$

where: k_v is mass transfer rate (conductivity) [L/T], D is water column depth [L], A_s is surface area of water column [L^2], V is volume of water column [L^3].

Volatilization from soil is a more complex process, requiring the balancing of several processes. A contaminant in soil will partition between the soil water, soil air, and the soil constituents. In the CTT&F sub-model, the volatilization from soils is assumed to proceed through a surface stagnant air boundary layer and involves desorption of the contaminant from soil, movement to the soil surface in the water or air phase, and vaporization into the atmosphere. Assuming zero vapor concentration above the surface, using Fick's Law, the volatilization rate from soil can be estimated by:

$$k_{vlt} = k_H \frac{D_a A_s}{d} \left(\frac{1}{V}\right) \tag{9b}$$

where: $D_a = 1.9 \cdot 10^{-4}/MW_C^{2/3}$ is diffusivity of contaminant in air, cm^2/s [L^2/T], V is volume of upper soil layer [L^3], A_s is surface area of soil column [L^2], d is thickness of stagnant air boundary layer [L]. Jury et al. (1983) suggested a value of 0.5 cm for d, which in general varies with both evaporation and relative humidity.

2.3.6. Dissolution. Explosives on training ranges are commonly present as crystalline solids (McGrath, 1995). Dissolution is the mechanism by which granular contaminants like explosives are transferred to other media as dissolved contaminants. Once dissolved, the contaminant is available for equilibrium partitioning and the full range of applicable transport and transformation processes. The maximum aqueous concentration that a solid phase granular contaminant can attain is defined by the solubility limit. Inclusion of contaminant aqueous dissolution improves model accuracy and has the potential to aid prediction of hazard persistence and assessment of remediation alternatives affected by dissolution of explosives or other granular contaminants (Lynch et al., 2004). In CTT&F, a

first-order process is used to describe granular contaminant dissolution rates (Cussler, 1997; Lynch et al., 2002):

$$\frac{\partial C_s}{dt} = \frac{k_{dsl}\alpha}{V}\left[S - (f_d + f_b)\, C_T\right] \tag{12}$$

where: C_s = granular (solid phase) contaminant concentration [M/L^3]; V = water volume [L^3]; k_{dsl} = dissolution mass transfer coefficient [L/T]; α = area available for mass transfer between the solid and liquid [L^2]; and S = aqueous solubility of the contaminant [M/L^3].

Assuming solid phase contaminant particles are spherical, the surface area available for mass transfer can be expressed as a function of the contaminant concentration, particle diameter, and particle density (Johnson and Zhang, 2006):

$$\alpha = \frac{6C_s V}{d_p \rho_p} \tag{13}$$

where: V = bulk volume (water and particles) [L^3]; d_p = particle diameter [L]; ρ_p = particle density of pure solid phase chemical [M/L^3].

2.3.7. Reaction Products. The contaminants simulated by CTT&F may be linked in sequences through reaction yields. When two or more contaminants are simulated, linked transformations that convert one chemical state variable into another may be implemented by specifying a reaction yield coefficient for each process. Reaction yields for transformation processes are useful in transport models to estimate the persistence of contaminants, including their degradation products.

2.4. Numerical Solutions

The coupled set of governing equations from (2) to (5) can be solved using a number of numerical techniques. In this effort, the general procedure uses a finite difference (FD) control volume solution scheme. A watershed system is discretized into a mesh of square grids, which corresponds to digital elevation model (DEM) grids, the locations of which are described in terms of rows, columns, and layers. DEM-derived local drainage directions are used as the basis for channel routing.

An explicit FD method was used to solve the differential equations. In this method the previous values are used to calculate a single unknown for the new time increment. The numerical solution is developed by substituting FD approximations for the derivatives of the governing equations. The solution for discretizing in time and space any of the governing equations presented in this work is obtained by using a forward-time FD. CTT&F also features a "semi-Lagrangian" soil (sediment bed) layer equation to account for the vertical distribution of the physical and contaminant properties of the overland soil and channel sediment columns. Applying a central-in-space explicit FD scheme, overland governing

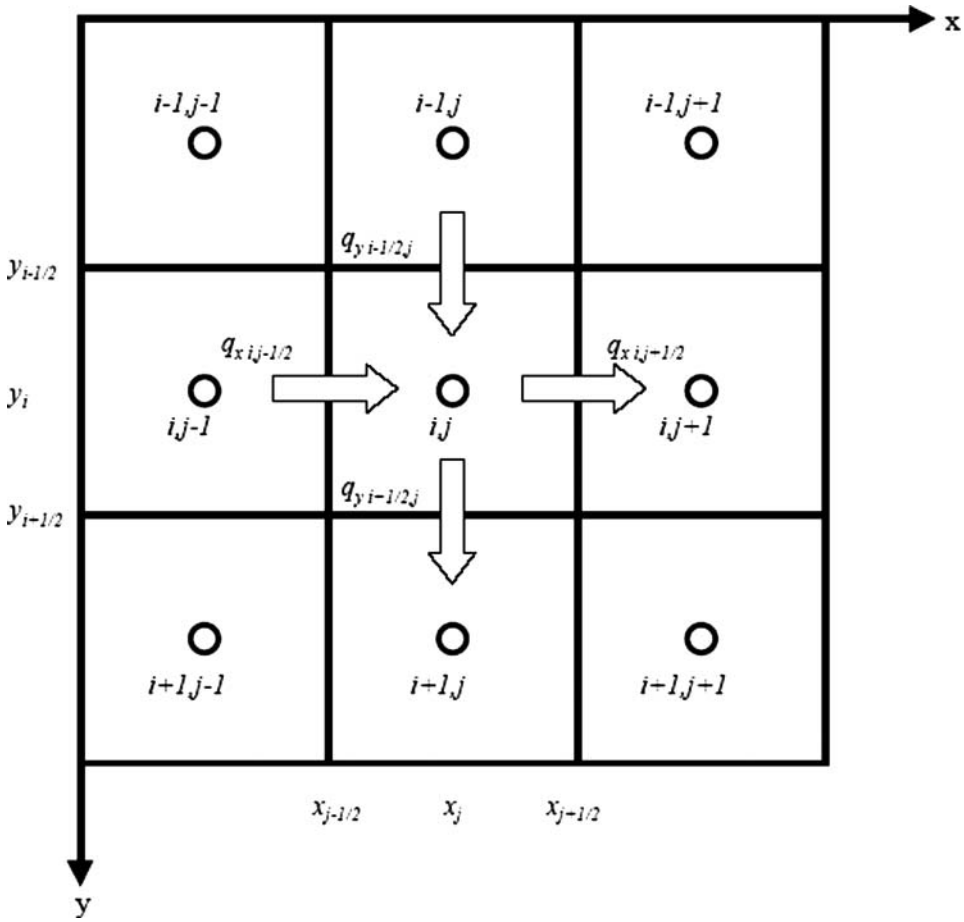

Figure 3. Two-dimensional finite difference computational mesh.

equations (3) and (4) at any FD cell (i, j) as shown in Figure 3 can be expressed as follows:

$$\begin{aligned}\frac{C_{i,j}^{n+1}-C_{i,j}^{n}}{\Delta t} = \frac{1}{w}&\left\{\begin{array}{l} -u_{xi,j}^{n}\left(C_{i,j+1/2}^{n}-C_{i,j-1/2}^{n}\right)+\frac{1}{h_{i,j}^{n}}\left[\left(hD_x\frac{\partial C}{\partial x}\right)_{i,j+1/2}^{n}-\left(hD_x\frac{\partial C}{\partial x}\right)_{i,j-1/2}^{n}\right] \\ -u_{yi,j}^{n}\left(C_{i+1/2,j}^{n}-C_{i-1/2,j}^{n}\right)+\frac{1}{h_{i,j}^{n}}\left[\left(hD_y\frac{\partial C}{\partial x}\right)_{i+1/2,j}^{n}-\left(hD_y\frac{\partial C}{\partial x}\right)_{i-1/2,j}^{n}\right]\end{array}\right\} \\ &-\frac{f}{h_{i,j}^{n}}(f_d+f_b)\left[(C_T^r)_{i,j}^{n}-(C_{T2}^r)_{i,j}^{n}\right]+\frac{k_e}{h_{i,j}^{n}}(f_d+f_b)\left[(C_{T2}^r)_{i,j}^{n}-(C_T^r)_{i,j}^{n}\right] \\ &+\frac{1}{h_{i,j}^{n}}\sum_{1}^{N}f_{pn}\left[(v_rC_{T2}^r)_{i,j}^{n}-(v_{se}C_T^r)_{i,j}^{n}\right] \\ &-k_{bio}(C_T^r)_{i,j}^{n}+\frac{k_{dsl}\alpha}{V}\left[S-(f_d+f_b)(C_T^r)_{i,j}^{n}\right]+\sum_{l}\sum_{k}k_{kl}Y_{kl}(C_T^r)_{i,j}^{n}\end{aligned} \tag{14}$$

$$\frac{(C^r_{T2})^{n+1}_{i,j}-(C^r_{T2})^n_{i,j}}{\Delta t} = \frac{f}{z}(f_d+f_b)\left[(C^r_T)^n_{i,j}-(C^r_{T2})^n_{i,j}\right] - \frac{k_e}{z}(f_d+f_b)\left[(C^r_{T2})^n_{i,j}-(C^r_T)^n_{i,j}\right]$$
$$-\frac{1}{z}\sum_1^N f_{pn}\left[(v_r C^r_{T2})^n_{i,j}-(v_{se}C^r_T)^n_{i,j}\right]$$
$$-k_{bio}(C^r_{T2})^n_{i,j}+\frac{k_{dsl}\alpha}{V}\left[S-(f_d+f_b)(C^r_{T2})^n_{i,j}\right]+\sum_l\sum_k k_{kl}Y_{kl}(C^r_{T2})^n_{i,j} \tag{15}$$

where $\Delta x = \Delta y = w =$ grid cell size [L]; j-$\frac{1}{2}$ and j+$\frac{1}{2}$ denote the left and right interfaces of cell (i, j), respectively; i-$\frac{1}{2}$ and i+$\frac{1}{2}$ denote the upper and lower interfaces of cell (i, j), respectively.

Channel governing equations (5) and (6) at any FD cell (j) can be expressed as follows:

$$\frac{C^{n+1}_j-C^n_j}{\Delta t} = -\frac{1}{\Delta x_j}u^n_{xj}\left((1-\alpha_{xj+1/2})C^n_j+\alpha_{xj+1/2}C^n_{j+1}-(1-\alpha_{xj-1/2})C^n_{j-1}-\alpha_{xj-1/2}C^n_j\right)$$
$$+\frac{1}{\Delta x_j}\frac{1}{A^n_j}\left((AD_x)^{n+1}_{j+1/2}\frac{C^n_{j+1}-C^n_j}{0.5(\Delta x_j+\Delta x_{j+1})}-(AD_x)^{n+1}_{j-1/2}\frac{C^n_j-C^n_{j-1}}{0.5(\Delta x_{j-1}+\Delta x_j)}\right)$$
$$+EA_s(f_d+f_b)\left[(C^w_{T2})^n_{i,j}-(C^w_T)^n_{i,j}\right]+\frac{1}{h^n_{i,j}}\sum_1^N f_{pn}\left[(v_r C^w_{T2})^n_{i,j}-(v_{se}C^w_T)^n_{i,j}\right]$$
$$-k_{bio}(C^w_T)^n_{i,j}+\frac{k_{dsl}\alpha}{V}\left[S-(f_d+f_b)(C^w_T)^n_{i,j}\right]+\sum_l\sum_k k_{kl}Y_{kl}(C^w_T)^n_{i,j} \tag{16}$$

$$\frac{(C^w_{T2})^{n+1}_{i,j}-(C^w_{T2})^n_{i,j}}{\Delta t} = -\frac{1}{z}\sum_1^N f_{pn}\left[(v_r C^w_{T2})^n_{i,j}-(v_{se}C^w_T)^n_{i,j}\right]-EA_s(f_d+f_b)\left[(C^w_{T2})^n_{i,j}-(C^w_T)^n_{i,j}\right]$$
$$-k_{bio}(C^w_{T2})^n_{i,j}+\frac{k_{dsl}\alpha}{V}\left[S-(f_d+f_b)(C^w_{T2})^n_{i,j}\right]+\sum_l\sum_k k_{kl}Y_{kl}(C^w_{T2})^n_{i,j} \tag{17}$$

Where

$$\alpha_{xj+1/2} = \frac{\Delta x_j}{\Delta x_j+\Delta x_{j+1}} \tag{18}$$

$$\alpha_{xj-1/2} = \frac{\Delta x_{j-1}}{\Delta x_{j-1}+\Delta x_j} \tag{19}$$

To generate solutions, the model computes dynamic mass balances for each state variable and accounts for all material that enters, accumulates within, or leaves a control volume through precipitation excess, external loads, transport and transformation. Overland flow transport calculations precede channel transport calculations (for the current time step) and the channel calculations start at the top link of the stream system and progress downstream. Thus the only unknowns for each channel link calculation are the contaminant concentration at the downstream end of the link at the end of the time step. The behavior of the numerical solution depends on the contaminant, the relative importance of the processes occurring, and the value of the Courant number. Small time steps are used in the beginning of each simulation because of the highly nonlinear nature of the equations.

2.5. Modeling Framework

To simulate the contaminant transport processes in watersheds, it is necessary to estimate beforehand the watershed flow and sediment transport driven by the hydrological processes.

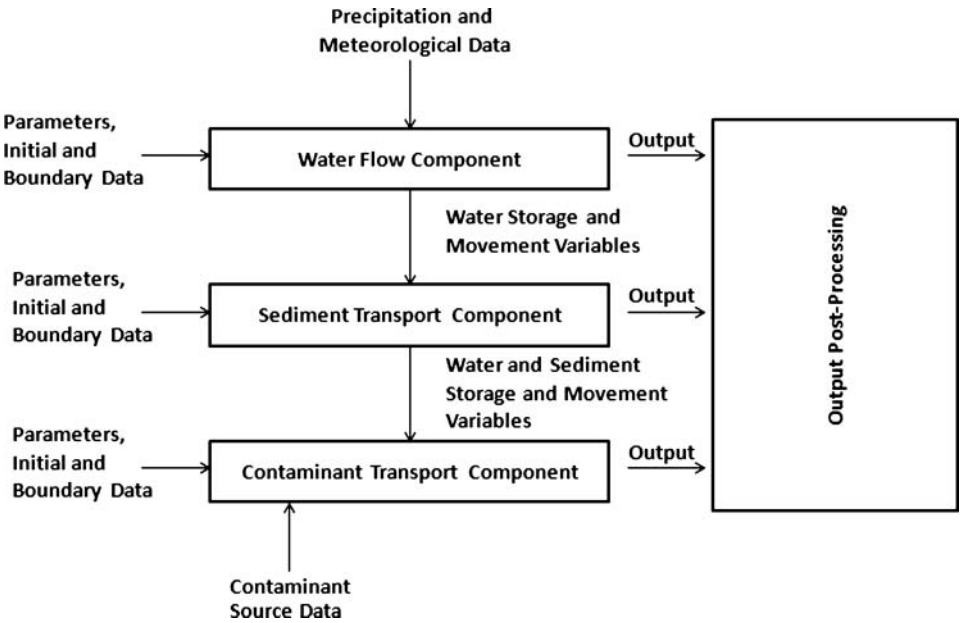

Figure 4. CTT&F modeling system framework (after Ewen et al., 2000).

The hydrological variables required to drive CTT&F can be calculated using any physically based distributed watershed model capable of producing a reasonable simulation of the watershed flow and sediment transport fields. These include: (1) for surface transport: overland flow depth, flow in the coordinate directions, sediment load, and sediment concentration; and (2) for subsurface transport: soil moisture and hydraulic head at various depths in the soil. The major components of the fully distributed modeling framework are hydrology, sediment transport, and contaminant transport. Each of the major components can be viewed as sub-models within the overall framework. The calculations for each process at any time level are independent and information is carried forward from hydrology to sediment transport to contaminant transport in order to generate a concentration solution. At any time level, flow is assumed to be unaffected by sediment and chemical transport, and sediment transport is unaffected by contaminant transport, so calculations for these three components (sub-models) have a natural hierarchy (Figure 4).

3. Model Testing and Evaluation

3.1. Experiment Set-up

To validate the general performance of the model, CTT&F was evaluated by means of a test plot study of explosives transport and transformation processes. The experimental procedure was designed to mimic rainfall-driven surface runoff and transport of explosives residuals deposited on surface soils at firing ranges. The experimental plot was 9.0 ft x 7.5 ft. The plot had a bed slope 2% and was designed to collect runoff water and sediment. Experiments were conducted to simulate two different surface roughness conditions: (1) “disturbed” (unvegetated); and (2) “undisturbed” (vegetated). The soils for these experiments were

Table 1
Physical characteristics of Camp Shelby fire range soils

Sand (%)	Silt (%)	Clay (%)	CEC[a] (meq/100g)	TOC[b]	PH	Ks[c] (in/hr)
60	20	20	11.6/9.8	1.1	5.2	0.55

[a]*CEC* = cation exchange capacity
[b]*TOC* = total organic carbon
[c]*Ks* = hydraulic conductivity

obtained from the Camp Shelby, Mississippi military firing range. The physical properties of the soils and initial contaminant concentrations before rainfall were measured as presented in Table 1. Rainfall was introduced through a rainfall simulator. The intensity and uniformity of the simulator were calibrated prior to field investigations. The simulated rainfall intensity for the overall plot area averaged 2.8 in/hr (7.1 cm/hr) and ranged from 2.7 to 2.9 in/hr (6.8 to 7.4 cm/hr). The simulated rainfall event lasted 30 ± 60 ± 90 min. Runoff and suspended sediment samples were collected at the downstream end of each plot. Runoff rates and volumes were determined by collecting samples every minute of a 30-minute rainfall simulation and every minute after rainfall was discontinued until it was noted that runoff had ceased. Total suspended sediment (TSS) samples were collected every minute for the first 15 minutes of runoff, then every five minutes during the 30-minute rainfall simulations and every minute afterward.

For the contaminant transport and transformation experiments, this study focused on Comp B, one of the primary explosive formulations used in munitions since World War II for its high explosive yield (Lever et al., 2005). Range activities can result in locally scattered chunks of Comp B on the soil surface with particles having a variety of surface textures and RDX/TNT ratios (Jenkins et al., 2006). 500 grams of Comp B in particles of various sizes (less than 1 cm in diameter and 2 mm in thickness to 3.5 cm in diameter and 2.5 cm thickness) was applied onto the soil surface. The Comp B used for this study was a 60/39 mixture of RDX and TNT with 1% wax and in the form of crystalline solids. Table 2 shows the average explosive contaminant concentrations for three Comp B samples. The physical and chemical properties of RDX and TNT are summarized in Table 3. After Comp B application to the soil surface, the test plot was subjected to a simulated rainfall event, which induced overland flow and contaminant transport. Once in the water, the main factor affecting fate and transport of RDX and TNT is advection with contributing factors being adsorption and transformation (Brannon and Myers, 1997). The rainwater was pre-tested for RDX and TNT to insure no additional contaminant was entering the system. The contaminant reaction and transport caused by each rainfall event was measured by collecting samples. During each rainfall event, 4-liter runoff samples were collected every

Table 2
Analysis for three Comp B particles

Comp B	HMX (mg/kg)	RDX (mg/kg)	TNT (mg/kg)
1	59424	562798	350955
2	68039	637121	393580
3	71505	672170	422214

Table 3
Physical and chemical characteristics of RDX and TNT[a]

Parameter	RDX	TNT
Empirical formula	$C_3H_6N_8O_6$	$C_7H_5N_3O_6$
Molecular weight (g/mol)	222.15	227.13
Density (g/cm^3)	1.82	1.654
Solubility in water (mg/L)	28.9 – 75.7	100 – 200
Diffusion coefficient in water (cm^2/s)	7.15×10^{-6}	6.71×10^{-6}
Octanol-water partition coefficient Log k_{ow}	0.81, 0.87	2.06, 1.86
Organic carbon partition coefficient Log k_{oc}	0.89 – 2.13	2.72
Soil-water partition coefficient k_d (mL/g)	0.0 – 7.8	0.0 – 56.0
Henry constant k_H (atm m3/mol)	1.96×10^{-11}, 2.6×10^{-11}	1.1×10^{-8}

[a]from McGrath (1995)

5 minutes (for 30 minutes after initiation of runoff) for chemical analysis and concentration of explosives.

The experimental plot was modeled using a domain consisting of 30 grid cells with a grid cell resolution of 1.5 ft by 1.5 ft (0.46 m by 0.46 m). In this study, various transformation parameters for RDX and TNT were calibrated empirically to reproduce the measured concentrations of RDX and TNT from the experiment based on their ranges in previous studies. Parameters included the following: dissolution rate, adsorption kinetics, soil to water partition coefficients, and transformation rate coefficients. Given the small scale of the test plot and the short duration of simulated rainfall, the focus of this study was the dissolution of Comp B, sorption with sediments, and associated multiphase transport of the contaminants.

3.2. Model Calibration and Validation

The CTT&F sub-model parameters subject to calibration were the diffusion coefficient, first order transformation rate, and partitioning coefficients. Calibrated model parameter values for RDX and TNT are summarized in Table 4. With one exception, parameter values for the validation simulation were identical to those for calibration. The exception was that the surface roughness values for unvegetated and vegetated plots were different during hydrologic and sediment simulations. RDX and TNT degradation kinetics were not addressed in this study due to short simulation times.

Table 4
Summary of model used parameter values for RDX and TNT

Parameter	RDX	>TNT
Density (g/cm^3)	1.82	1.654
Aqueous solubility (25°C) (g/cm^3)	4.6×10^{-5}	1.3 x10^{-4}
Diffusion coefficient (25°C) (cm^2/s)	2.2×10^{-6}	6.7×10^{-6}
1st order transformation rate (1/hr)	$0 – 1.0 \times 10^{-1}$	-
Soil-water partition coefficient (L/kg)	6.75	56.0

Table 5
Summary of hydrologic, sediment, and contaminant transport model performance

Parameter	Simulated	Measured	Error (%)	R^2	RMSE	NSE
Unvegetated plot						
Surface runoff (L/min)	189.72	201.75	5.96	0.723	1.195	0.685
Total suspended sediment (mg/L)	20917.60	30653.33	31.76	0.166	719.47	0.231
Dissolved RDX (mg/L)	2.805	2.782	0.84	0.995	0.012	0.994
Dissolved TNT (mg/L)	3.806	3.776	0.79	0.997	0.012	0.997
Vegetated plot						
Surface runoff (L/min)	151.20	139.83	8.13	0.944	0.641	0.923
Total suspended sediment (mg/L)	726.02	2106.67	65.53	0.04	134.00	0.247
Dissolved RDX (mg/L)	1.155	1.207	4.32	0.687	0.052	0.532
Dissolved TNT (mg/L)	0.443	0.417	6.34	0.895	0.014	0.865

The model was calibrated by comparing simulated and measured runoff, sediment concentration, and contaminant concentrations and iteratively adjusting model parameters to minimize differences between simulated and measured conditions. Numerous performance statistics have been advocated for determining the validity or accuracy of a model, e.g., Kottegoda and Rosso (1997) and Legates and McCabe (1999). They include goodness-of-fit or relative error measurements, statistics that quantify the error in units of the process being modeled, and graphical plots. Following statistical performance criteria used for estimating quantitative performance of the CTT&F model were calculated and are given in Table 5.

$$Error\,(\%) = \frac{\left|\sum_i simulated\ value - \sum_i measured\ value\right|}{\sum_i measured\ value_i} * 100 \tag{20a}$$

$$RMSE = \sqrt{\frac{1}{n}\sum_i (simulated\ value_i - measured\ value_i)^2} \tag{20b}$$

$$R^2 = \frac{\left(\sum_i (measured\ value_i - measured\ mean_i)(simulated\ value_i - simulated\ mean_i)\right)^2}{\sum_i (measured\ value_i - measured\ mean)^2 \sum_i (simulated\ value_i - simulated\ mean_i)^2} \tag{20c}$$

$$NSE = 1.0 - \frac{\sum_i (measured\ value_i - simulated\ value_i)^2}{\sum_i (measured\ value_i - measured\ mean)^2} \tag{20d}$$

The important parameters in terms of the RDX and TNT loads are the physical and chemical characteristics of RDX and TNT. Other important parameters are the parameters that affect flow and soil erosion, including the surface roughness, the USLE practice factor, the soil composition and layer depth. These parameters that control surface runoff and

sediment processes also control RDX and TNT, two contaminants found in dissolved form in overland flow. During the calibration processes, the most sensitive parameters identified for dissolved chemical concentration in overland flow were the dissolution rate and the partition coefficient.

3.3. Test Plot Simulation Results and Discussion

Numerical results were obtained from running the CTT&F sub-model. In this experiment, overland flow causes erosion and dissolution of the solid Comp B, a fraction of which infiltrates into the soil while the remainder is transported downstream. *Even though distributed observations for RDX and TNT concentrations were not measured in this study, we can infer and trace the migration of distributed RDX and TNT sources using the model.* As expected, the onset of rainfall results in dissolution of the solid contaminant, with infiltration and wash-off resulting in removal of the solid within a short period of time. The graphical representation of the spatial variation of dissolved RDX and TNT concentration as a function of time also confirms the generally expected behavior that with increasing time, the peak concentration decreases as it migrates downstream. During this movement, infiltration also occurs so that contamination of the surrounding subsurface area occurs. The model results can provide quantitative information on the amount of contaminant infiltrating into the subsurface. These are important in investigating the loss of contaminants due to the transport and transformation of distributed sources. Obviously, some modifications to these results are to be expected when other transformation effects are incorporated into the model.

The calibration and validation results and the statistics for total flow volume, TSS, dissolved RDX and TNT concentrations are summarized in Table 5. With respect to hydrology, model performance was good for both the unvegetated and the vegetated plots and the simulated values compared reasonably well with the measurements. The flow volume, peak flow, and time to peak are all accurately simulated. The event averaged percent errors of both simulated total surface discharges were less than 10% of its corresponding measured value. The RMSE and R^2 values between simulated and measured results for the unvegetated plot were 1.195 and 0.723, respectively. For the vegetated plot the RMSE and R^2 values between simulated and measured results were 0.641 and 0.944, respectively. With respect to sediment transport, the model did not fully capture the initial wash-off of sediments for both simulations; the event averaged percent error of simulated TSS concentration from both unvegetated and vegetated plots was 31.76% and 55.22, respectively. The RMSE was considered to be high and the R^2 value was low. The model performance for suspended sediment concentration was strongly affected by the initial six samples collected and the extremely high sediment concentrations that were measured from these samples. The errors are suspected to be associated with an error in the sample concentration measurements and/or raindrop splash erosion, which is not accounted for within the model. Furthermore, the model was capable of capturing the general trends of TSS concentration over time; the TSS concentrations for both simulations were considered to be satisfactory after the initiation of the event. The Error, RMSE, R^2, and NSE values are greatly improved without the inclusion of the first six samples. Surface runoff and sediment volumes from the unvegetated conditions were greater than those from the vegetated conditions. These finding were expected because reduced runoff volumes from the vegetated surface were associated with more resistance to overland flow and more infiltration opportunity time.

With respect to contaminant transport, RDX and TNT concentration errors for both simulations were very small (within 7%). The R^2 values between simulated and measured concentration results from the unvegetated plot were 0.995 and 0.997 for RDX and TNT,

respectively. The R^2 values between simulated and measured results from the vegetated plot were 0.687 and 0.895 for RDX and TNT, respectively. Further, the model performed well for two different data sets. Comparisons of the overall shape of simulated and measured results over time for surface runoff discharge, TSS concentration, dissolved RDX and TNT concentrations in surface runoff are shown in Figure 5. These figures are representative of the results for both unvegetated and vegetated plots. The agreement of model simulations and measurements for the experimental test plots explosive contaminants from the field is satisfactory, thus showing that the CTT&F sub-model is able to capture the essence of explosive fate controlled by dissolution, partitioning, and overland flow transport processes. While the data set used in this study is satisfactory for model validation, deficiencies in the data set, which are common to most watersheds, prevent validation of the appropriateness of the other processes.

From the above discussions, the CTT&F model results can be used to address questions of management interest to guide watershed contamination mitigation efforts by examining the load of material transported through different areas of the landscape. Bare-ground conditions produced higher concentrations of RDX and TNT than the vegetated conditions for all experimental conditions. Therefore vegetated surfaces are effective in reducing the overall transport of contaminants in overland flow. The vegetation can act as an effective barrier allowing for possible contaminant entrapment within the vegetation, adsorption to the plant material, and infiltration through the soil profile. This study also helps in the understanding of the relative transport of RDX and TNT in the overland flow regime from bare and vegetated soil surfaces.

This experiment illustrates how CTT&F can be used to assess the relative impacts that upland source areas have on downstream water quality. Unfortunately, plot limitations inhibited investigation of other scenarios. Because of the limitations in experiment design, further field applications are needed to fully assess the model formulations.

4. Conclusions

CTT&F is a significant contribution to multiphase contaminant transport modeling at the watershed scale in that a physically based, spatially distributed approach is used which combines the upland and channel components of transport and transformation. A coupled CTT&F with hydrological model is particularly suitable for simulating the impacts of land-use and climate changes on contaminant transport, and for identifying watershed management strategies which minimize distributed contaminant source effects both on the upland and along the channel system. The CTT&F equations are comprehensive, physically based, and fully compatible with various distributed watershed hydrologic models which provide the required hydrological and sediment variables. The model computes on a grid basis for considering spatially varied soils, land uses, and other hydrologic characteristics. The physical basis is important because it provides the link between the simulations and physical property measurements. Contaminant transformations are obvious and easily modified to account for more complicated processes. The CTT&F sub-model not only generates time series outputs of contaminant state variables at specified cells in space over time, but also provides the temporal spatial distribution results of contaminant sources in different phases.

CTT&F was tested to demonstrate its performance in describing such processes as solid dissolution, partitioning, and overland flow transport using an experimental plot. Comparisons between simulated and measured results for hydrologic, sediment, and contaminant variables of the model have been described. The comparisons showed that the

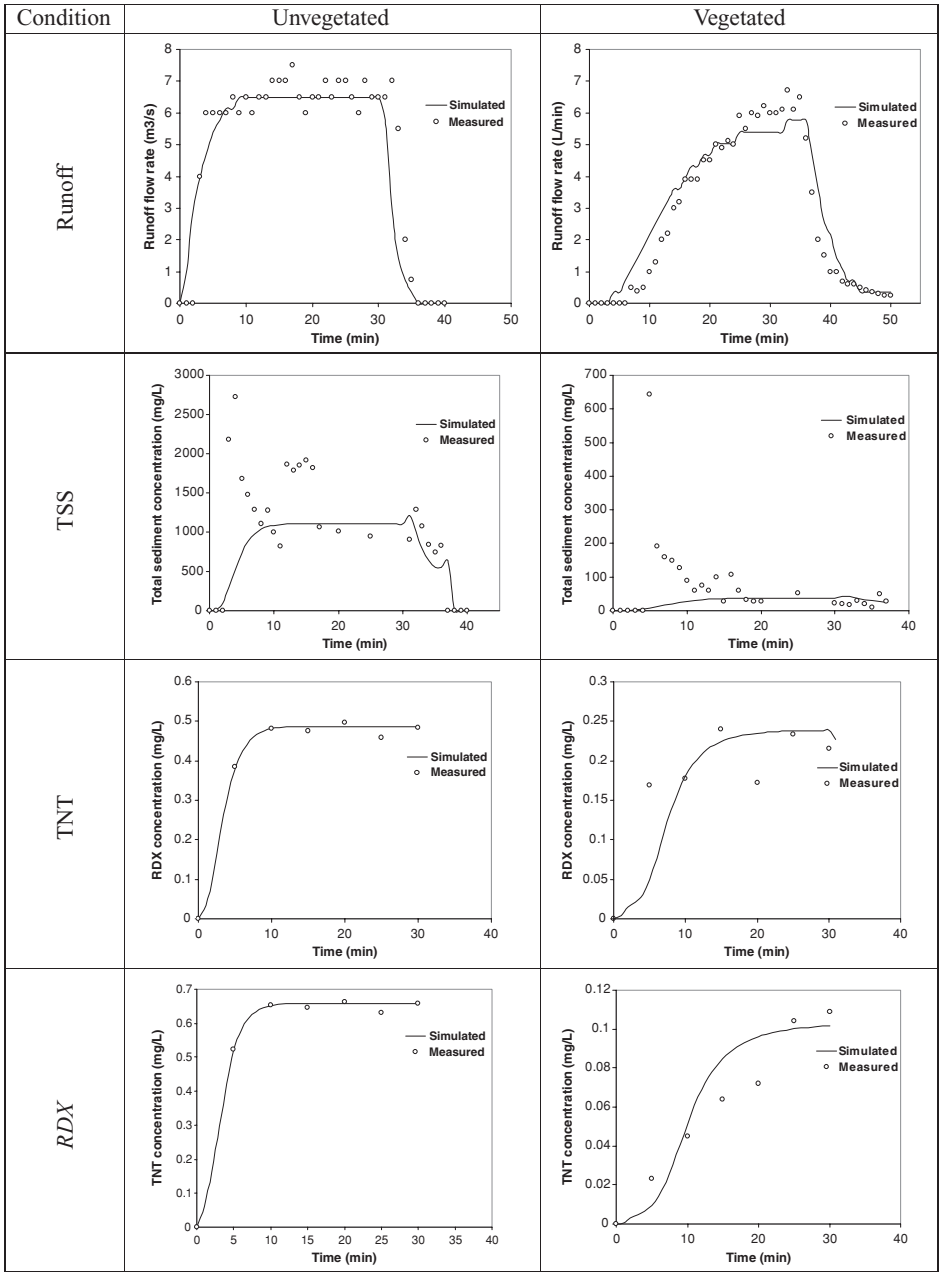

Figure 5. Comparison of simulated and measured surface runoff discharge, total suspended sediment (TSS), RDX, and TNT for unvegetated and vegetated test plots.

model was capable of simulating the explosive contaminants from the field with reasonable accuracy. Contaminants released from surface sources were generally simulated within 10% of observed measurements. Overall comparisons were encouraging, and showed promise for the potential use of the CTT&F sub-model for predicting the fate of distributed

sources at watersheds. More tests are needed to assess the variability in the model parameters, to confirm the predicted time sequences, and to improve confidence in predicted concentrations. Though further experiment and field testing is needed, CTT&F is an important contribution to the ability to simulate solid and multiphase contaminant fate and transport at the watershed scale, including the transport of contaminants adsorbed to sediment particles and bound DOC.

Future research is expected to enhance the capability of CTT&F, which included adding other transformations, environmental conditions, and unsaturated soil capabilities. While improvements to the CTT&F sub-model can be made, further evaluation of the model is dependent on acquisition of field sediment and water quality monitoring data paired in time with the conditions simulated.

Acknowledgments

This work was supported by the U.S. Army Corps of Engineers Environmental Quality Technology Research Program. We greatly acknowledge and appreciate the laboratory experiment work conducted by Ms. Cynthia Price and her team.

References

Birkinshaw, S. J., and Ewen, J. 2000. Nitrogen transformation component for SHETRAN catchment nitrate transport modelling. *J. Hydro*. **230**(2000), 1–17.

Brannon, J. M., and Myers, T. E. 1997. Review of fate and transport processes of explosives. *U.S. Army Engineer Waterways Experiment Station Technical Report IRRP-97-21*, Vicksburg, MS.

Brannon, J. M., and Pennington, J. C. 2002. Environmental fate and transport process descriptors for explosives. *U.S. Army Engineer Research and Development Center ERDC/EL TR-02-10*, Vicksburg, MS.

Center for Public Environmental Oversight (CPEO). 2002. *Toxic Ranges*. Available online at: http://www.cpeo.org/.

Chapra, S. C. 1997. *Surface Water-Quality Modeling*, McGraw-Hill, New York.

Clausen, J., and Korte, N. 2009. The distribution of metals in soils and porewater at three U.S. military training facilities. *Soil and Sediment Contamination* **18**, 546–563.

Clausen, J. L. 2005. Range assessment lessons learned. *Federal Facilities Environmental Journal* **Summer**, 49–62.

Clausen, J. L., Robb, J., Curry, D., Gregson, B., and Korte, N. 2004. Contaminants on military ranges: A case study of Camp Edwards, Massachusetts, USA. *Environmental Pollution* **129**, 13–21.

Cussler, E. L. 1997. *Diffusion Mass Transfer in Fluid Systems*, 2nd ed., Cambridge Press, New York.

Downer, C. W., and Ogden, F. L. 2004. GSSHA: A model for simulating diverse streamflow generating processes. *J. Hydrol. Engr*. **9**(3), 161–174.

Ewen, J., Parkin, G., and O'Connell, P. E. 2000. SHETRAN: Distributed river basin flow and transport modeling system. *J. Hydro. Engr.* **5**(3), 250–258.

Gschwend, P. M., and Wu, S. 1985. On the constancy of sediment-water partition coefficients of hydrophobic organic pollutants. *Environ. Sci. Technol.* **19**(6), 90–6.

Hjelmfelt, A. T., and Wang, M. 1999. Modeling hydrologic and water quality responses to grass waterways. *J. Hydrol. Engr*. **4**(3), 251–256.

Jenkins, T. F., Topp, G. C., Hewitt, A. D., Grant, C. L., Thiboutat, S., Ampleman, G., Walsh, M. E., Ranney, T. A., Ramsey, C. A., Palazzo, A. J., and Pennington, J. C. 2006. Identity and distribution of residues of energetic compounds at army live-fire training ranges. *Chemosphere* **63**, 1280–1290.

Johnson, B. E., Julien, P. Y., Molnár, D. K., and Watson, C. C. 2000. The two-dimensional upland erosion model CASC2D-SED. *J. American Water Resour. Assoc.* **36**(1), 31–42.

Johnson, B. E., and Zhang, Z. 2006. Development of a distributed sources Contaminant Transport, Transformation and Fate (CTT&F) sub-model for military installations. *U.S. Army Engineer Research and Development Center ERDC/EL TR-07-10*, Vicksburg, MS.

Julien, P. Y., and Saghafian, B. 1991. *CASC2D User's Manual - A Two-dimensional Watershed Rainfall-runoff Model*. Department of Civil Engineering, Colorado State University Report CER90-91PYJ-BS-12, Fort Collins, CO.

Julien, P. Y., Saghafian, B., and Ogden, F. L. 1995. Raster-based hydrologic modeling of spatially-varied surface runoff. *Water Resour. Bulletin* **31**(3), 523–536.

Jury, W. A., Spencer, W. F., and Farmer, W. J. 1983. Behavior assessment model for trace organics in soil: I. *Model description. J. Environ. Qual*. **12**(4), 558–564.

Kottegoda, N. T., and Rosso, R. 1997. *Statistics, Probability, and Reliability for Civil and Environmental Engineers*, McGraw-Hill, New York.

Legates, D. R., and McCabe, G. J. 1999. Evaluating the use of "goodness-of-fit: measures in hydrologic and hydroclimatic model validation. *Water Resour. Res*. **35**(1), 233–241.

Lever, J. H., Taylor, S., Perovich, L., Bjella, K., and Packer, B. 2005. Dissolution of composition B detonation residuals. *Environ. Sci. Technol*. **39**(22), 8803–8811.

Lynch, J. C., Brannon, J. M., Hatfield, K., and Delfino, J. J. 2004 An exploratory approach to modeling explosive compound persistence and flux using dissolution kinetics. *Journal of Contaminant Hydrology* **66**(3-4), 147–159.

Lynch, J. C., Brannon, J. M., and Delfino, J. J. 2002. Dissolution rates of three high explosive compounds: TNT, RDX, and HMX. *Chemosphere* **47**(2002), 725–734.

McGrath, C. J. 1995. *Review of Formulations for Processes Affecting the Subsurface Transport of Explosives*. U.S. Army Engineer Waterways Experiment Station Technical Report IRRP-95-2, Vicksburg, MS.

Pennington, Judith C., Jenkins, Thomas F., Thiboutot, Sonia, Ampleman, Guy, Hewitt, Alan D., Walsh, Marianne E., Ranney, Thomas A., Ramsey, Charles A., Grant, Clarence L., Collins, Charles M., Brochu, Sylvie, and Bigl, Susan R. 2005. *Identity and Distribution of Residues of Energetic Compounds at Military Live-Fire Training Ranges*. U.S. Army Engineer Research and Development Center, ERDC TR-05-10, Vicksburg MS.

USEPA. 1997. *Administrative Order for Response Action EPA Docket Number SDWA-1-97-1030, USEPA Region 1 in the Matter of Training Range and Impact Area, Massachusetts Military Reservation*. USEPA, Washington, DC. Available at http://groundwaterprogram.army.mil/groundwater/admin/orders/Ao1.pdf.

Velleux, M. 2005. *Spatially Distributed Model to Assess Watershed Contaminant Transport and Fate*. Colorado State University Ph.D. thesis, Fort Collins, CO.

Yan, M., and Kahawita, R. 2000. Modeling the fate of pollutant in overland flow. *Water Res.* **34**(13), 3335–3344.

Young, R. A., Onstad, C. A., Bosch, D., and Anderson, W. P. 1989. AGNPS: A nonpoint-source pollution model for evaluating agricultural watersheds. *J. Soil & Water Conserv*. **44**(2), 168–173.