# A multi-channel fiber optic phosphorescent sensor for monitoring dissolved oxygen

M.S. Final Exam
Manasi S. Katragadda

Advisor: Dr. Kevin L. Lear
Committee: Dr. Diego Krapf and Dr. Kenneth Reardon

Department of Electrical and Computer Engineering
Colorado State University

February 23, 2009

# Outline

- Introduction and motivation
- Background
- Design and fabrication of multi-channel source and integration with detection system
- Measurements taken with multi-channel sensor instrument
- Monitoring dissolved oxygen using multi-channel sensor instrument
- Conclusions and future work

# Outline

- <u>Introduction and motivation</u>
- Background
- Design and fabrication of multi-channel source and integration with the detection system
- Measurements taken with multi-channel sensor instrument
- Monitoring dissolved oxygen using multi-channel sensor instrument
- Conclusions and future work

# Application

In-situ, real-time, simultaneous monitoring of multiple but chemically similar contaminants in ground water, such as

- toluene (source: paint solvents, thinners)
- trichloroethylene (source: metal degreasing)
- dichloroethylene, perchloroethylene (source: dry cleaning products)
- vinyl chloride (source: PVC products)

http://www.epa.gov/

# Outline

- Introduction and motivation
- **Background**
- Design and fabrication of the multi-channel source and integration with the detection system
- Measurements taken with the multi-channel sensor instrument
- Monitoring dissolved oxygen using the multi-channel sensor instrument
- Conclusions and future work

# Chemical sensing mechanism

Monitoring contaminants with genetically engineered enzymes via indirect monitoring of DO in water

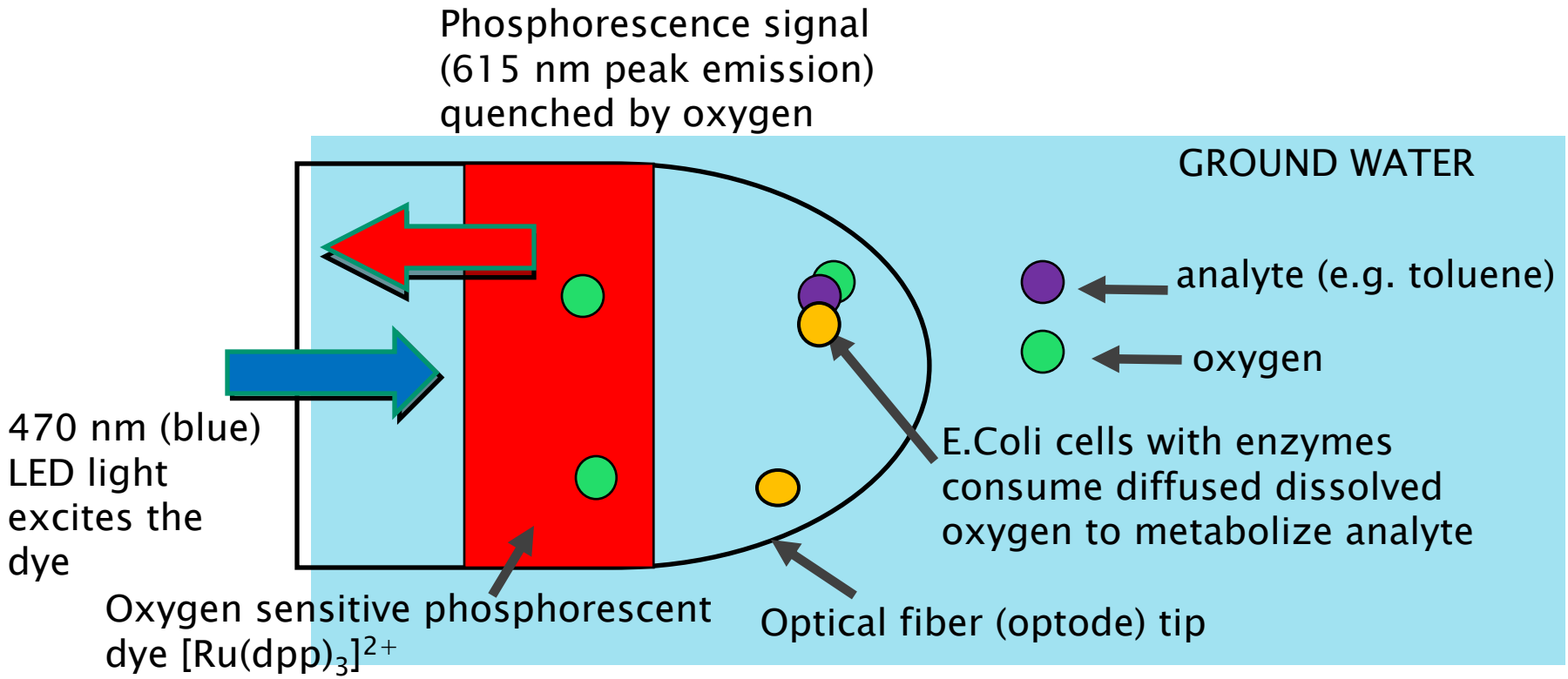


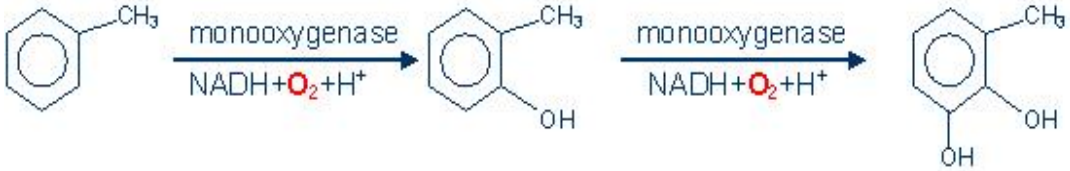

# Absorption and emission spectrum of $[Ru(dpp)_3]^{2+}$

Absorption peak at ~470 nm  Emission peak at ~620 nm

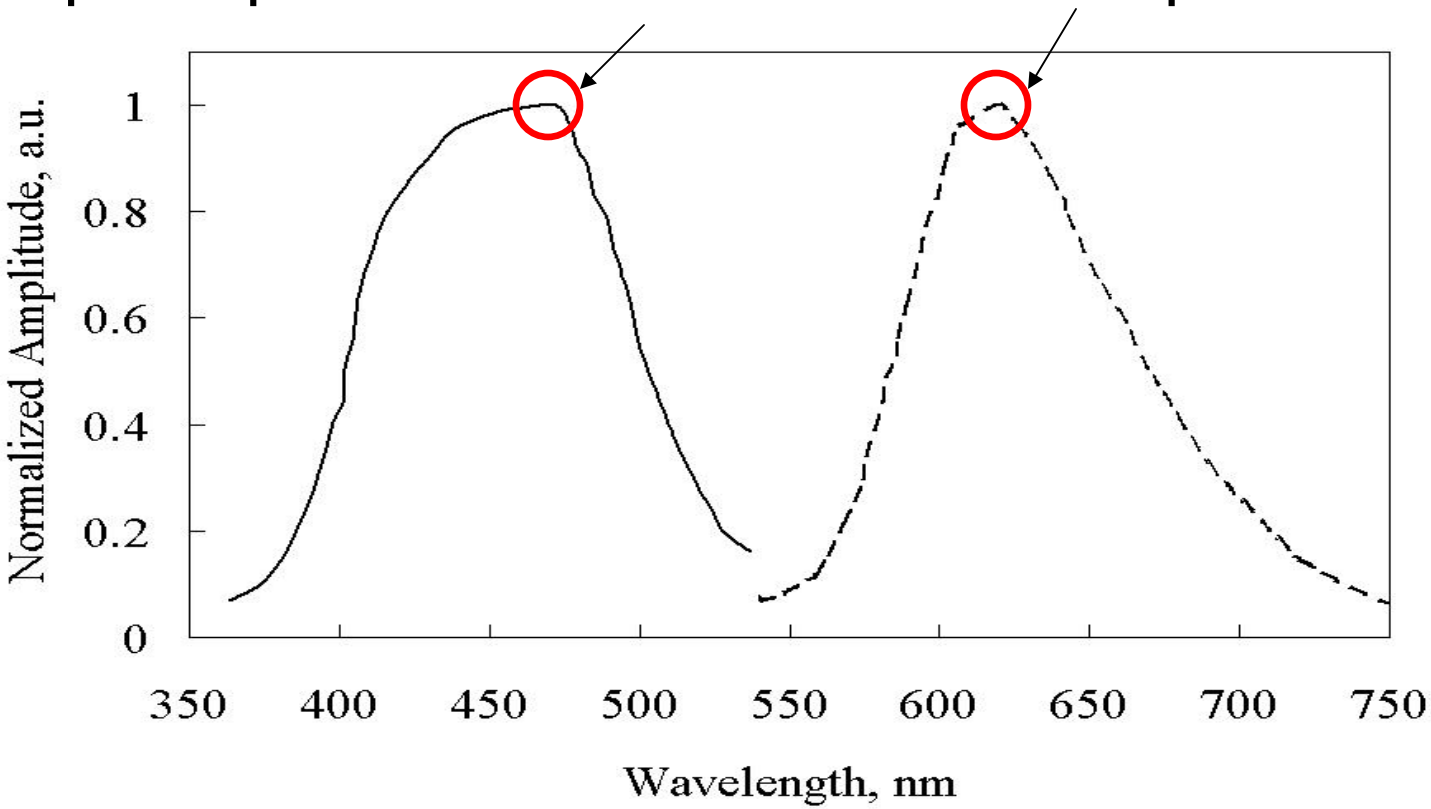


Reproduced from Gao et. al, *Biotech. and Bioengr.* 86, 425-433 (2004)

# Transduction mechanisms in the multi-channel sensor

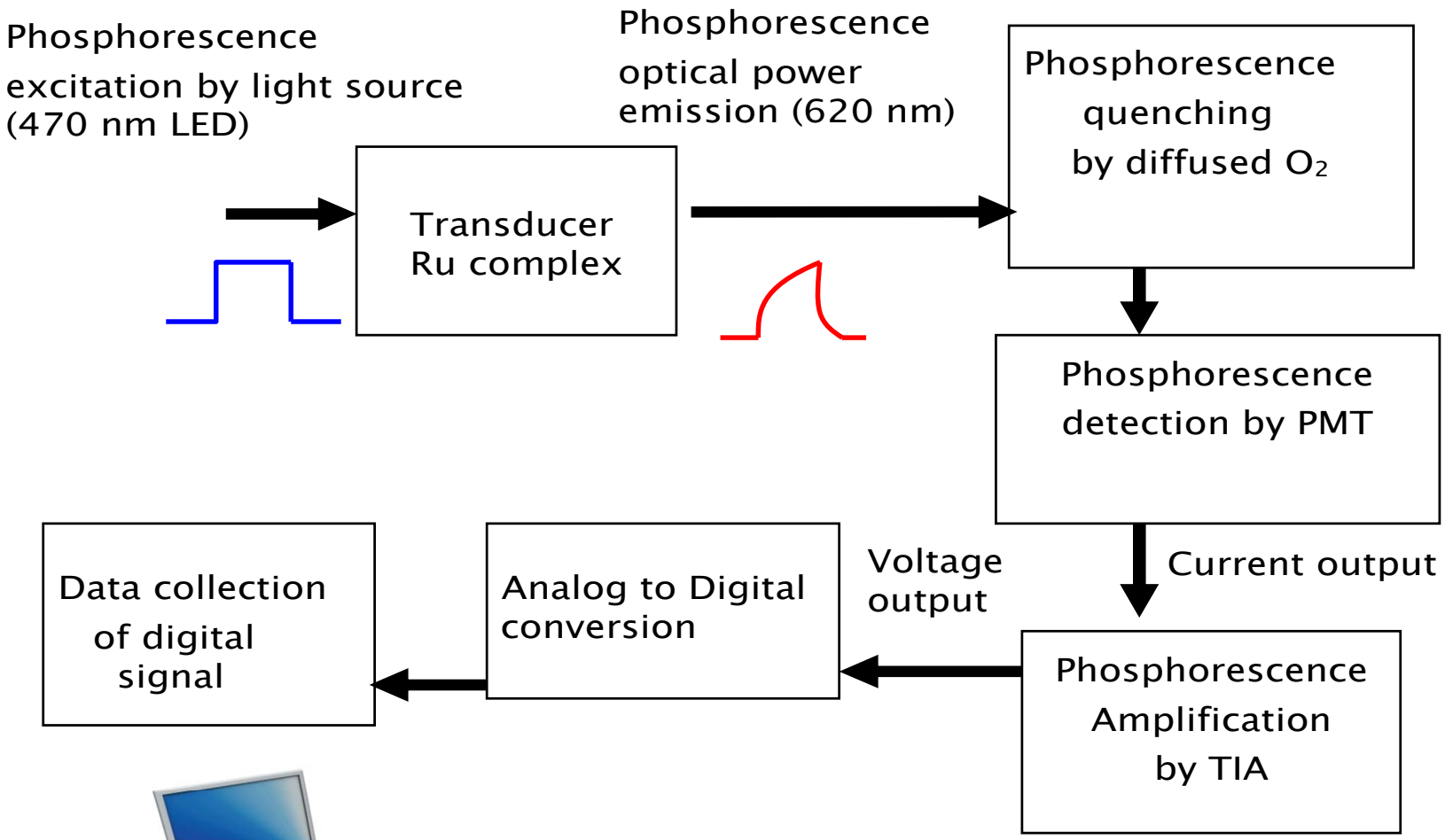

# Multi-channel sensor architecture

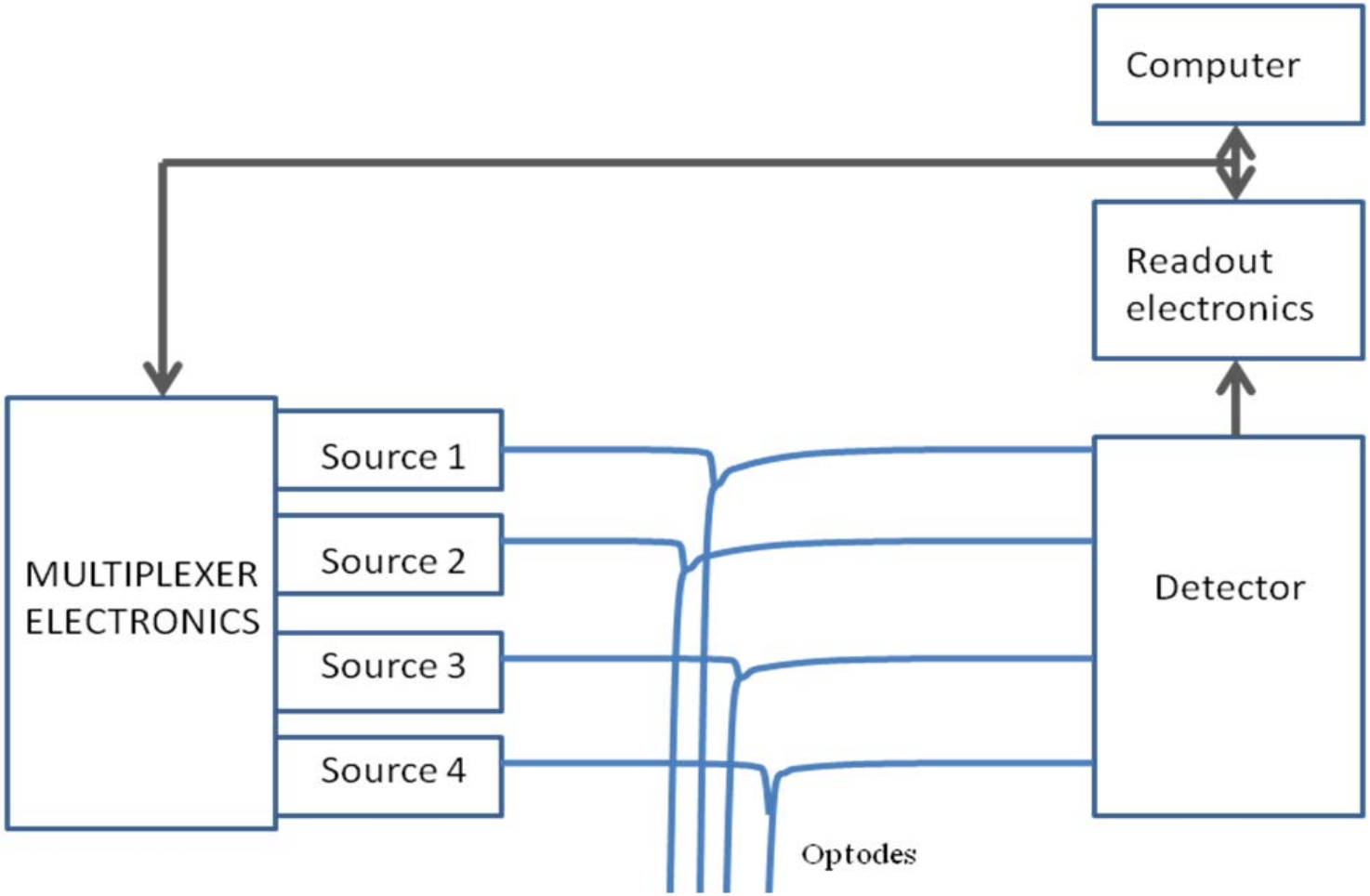


- A multiple source-single detector system based on time-division multiplexing

# Other options for channel switching

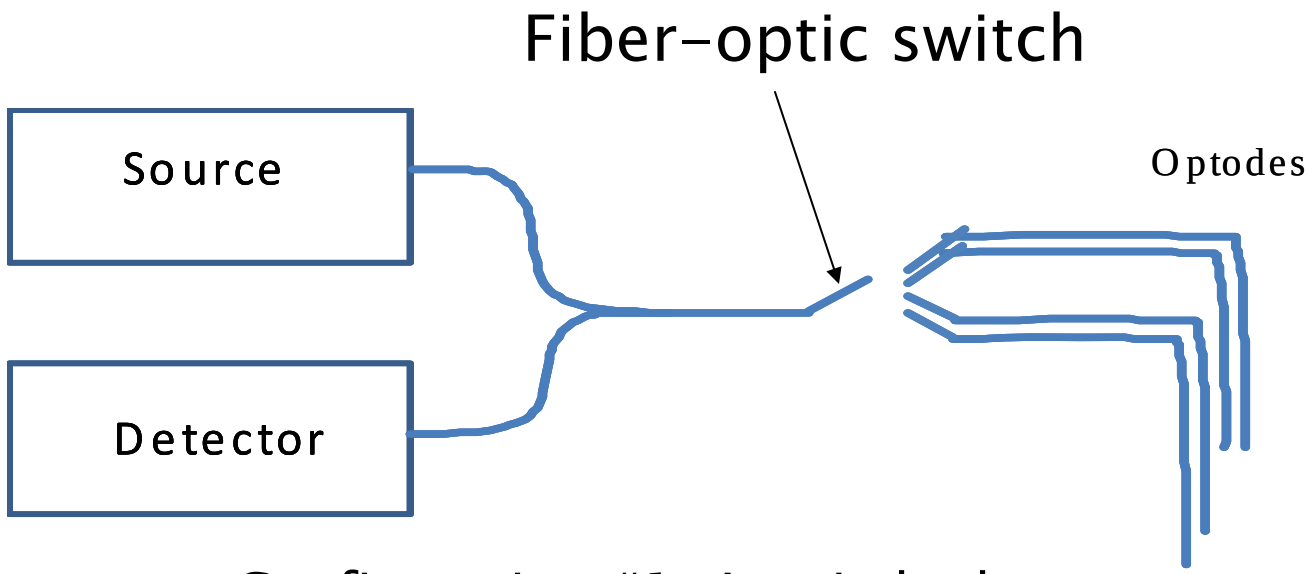


Configuration #1: A switched system

- Commercial plastic fiber optic switches: highly expensive, **approx.** five thousand dollars)

- Glass fiber optic switches that have been used for telecommunication purposes available readily commercially

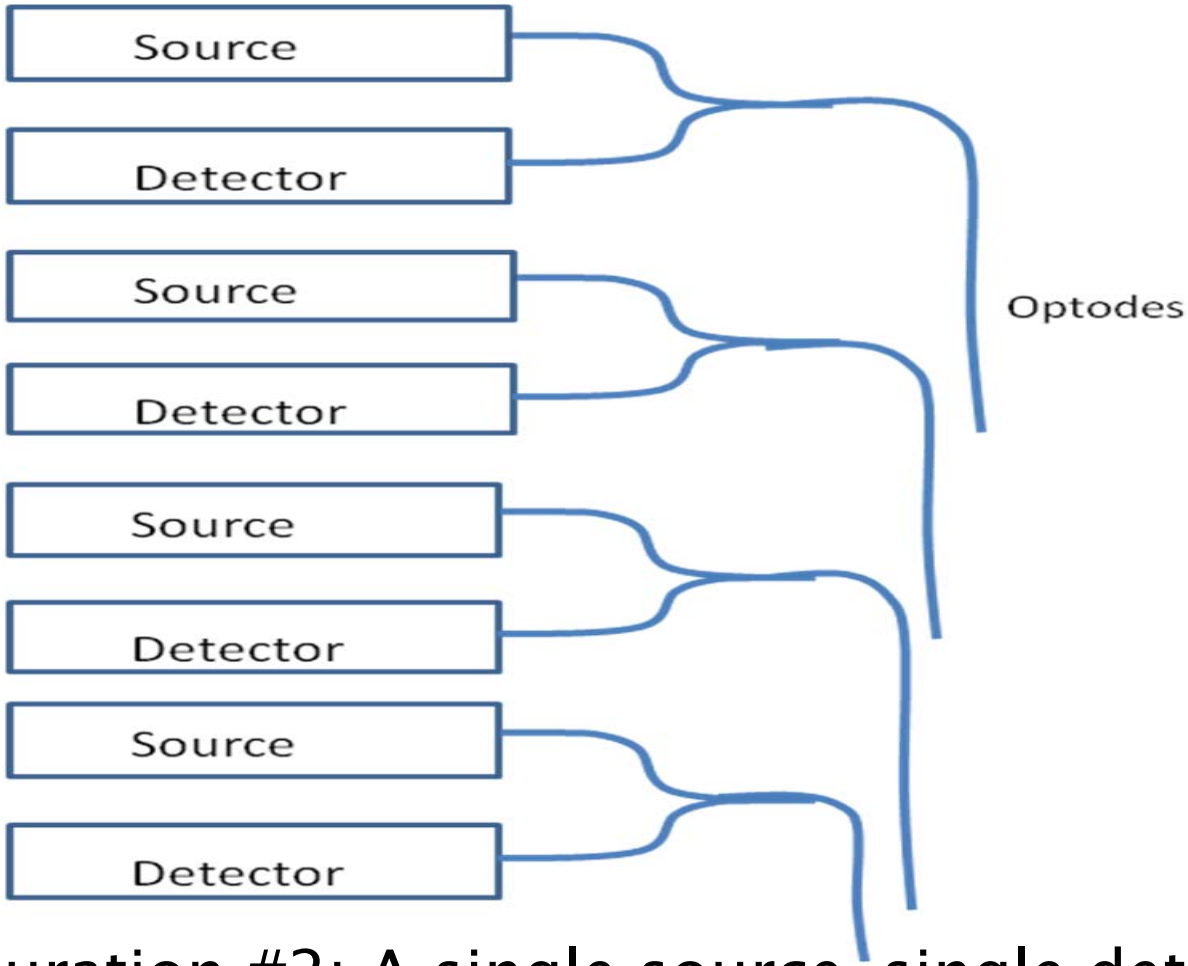


Configuration #2: A single source-single detector replicated option

- Multiple detectors are highly expensive

# Time-division multiplexing for monitoring multiple optodes

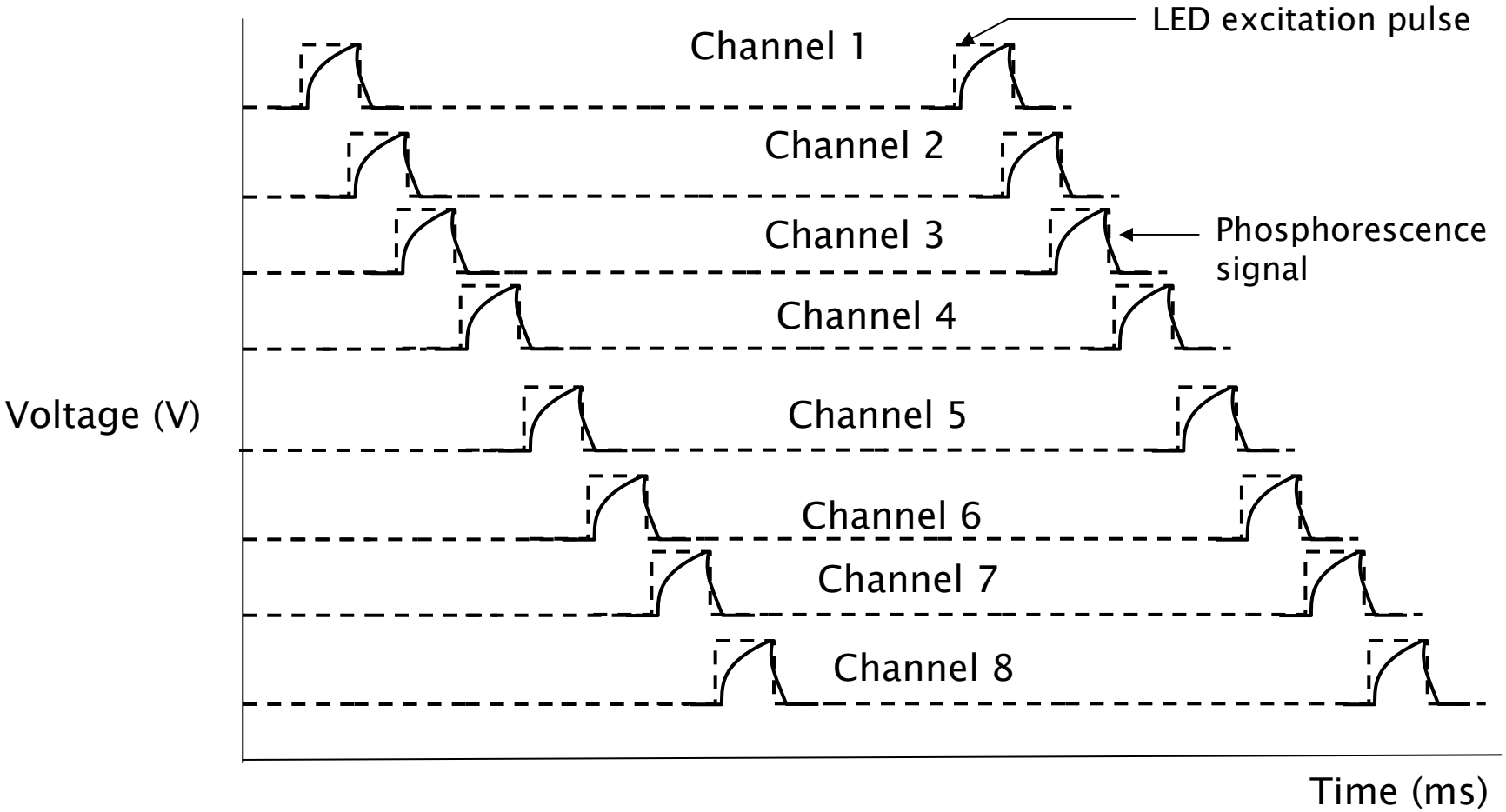

# Trace of the superposition of phosphorescence signals at the PMT

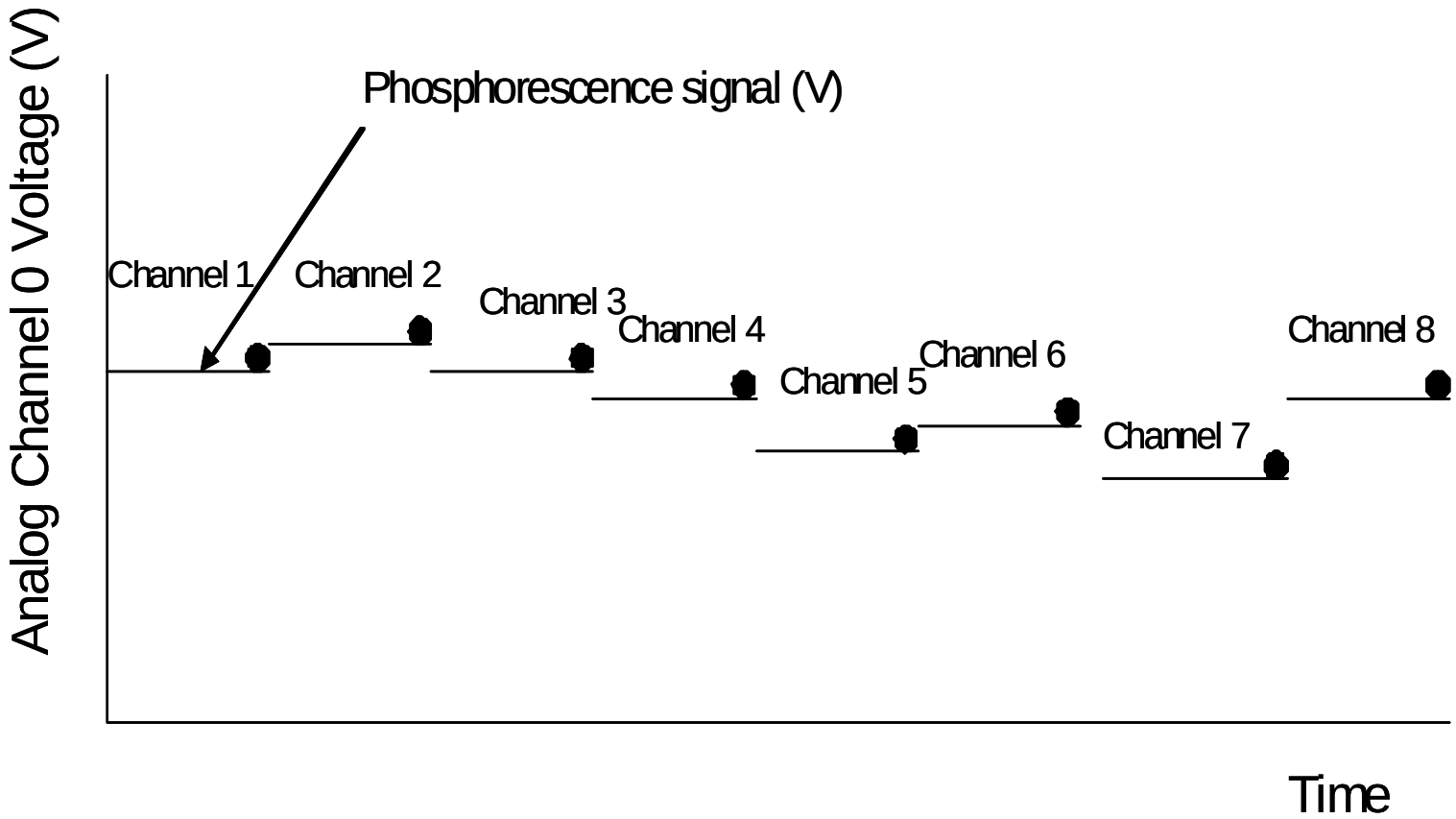

# Outline

- Introduction and motivation
- Background
- <u>Design and fabrication of multi-channel source and integration with detection system</u>
- Measurements taken with multi-channel sensor instrument
- Monitoring dissolved oxygen using multi-channel sensor instrument
- Conclusions and future work

# Design and fabrication of the multi-channel sensor

Multi-channel sensor

Instrument

Acquisition Software written in LabVIEW

Excitation source system

Detection system

# Internal schematic of the multi-channel instrument

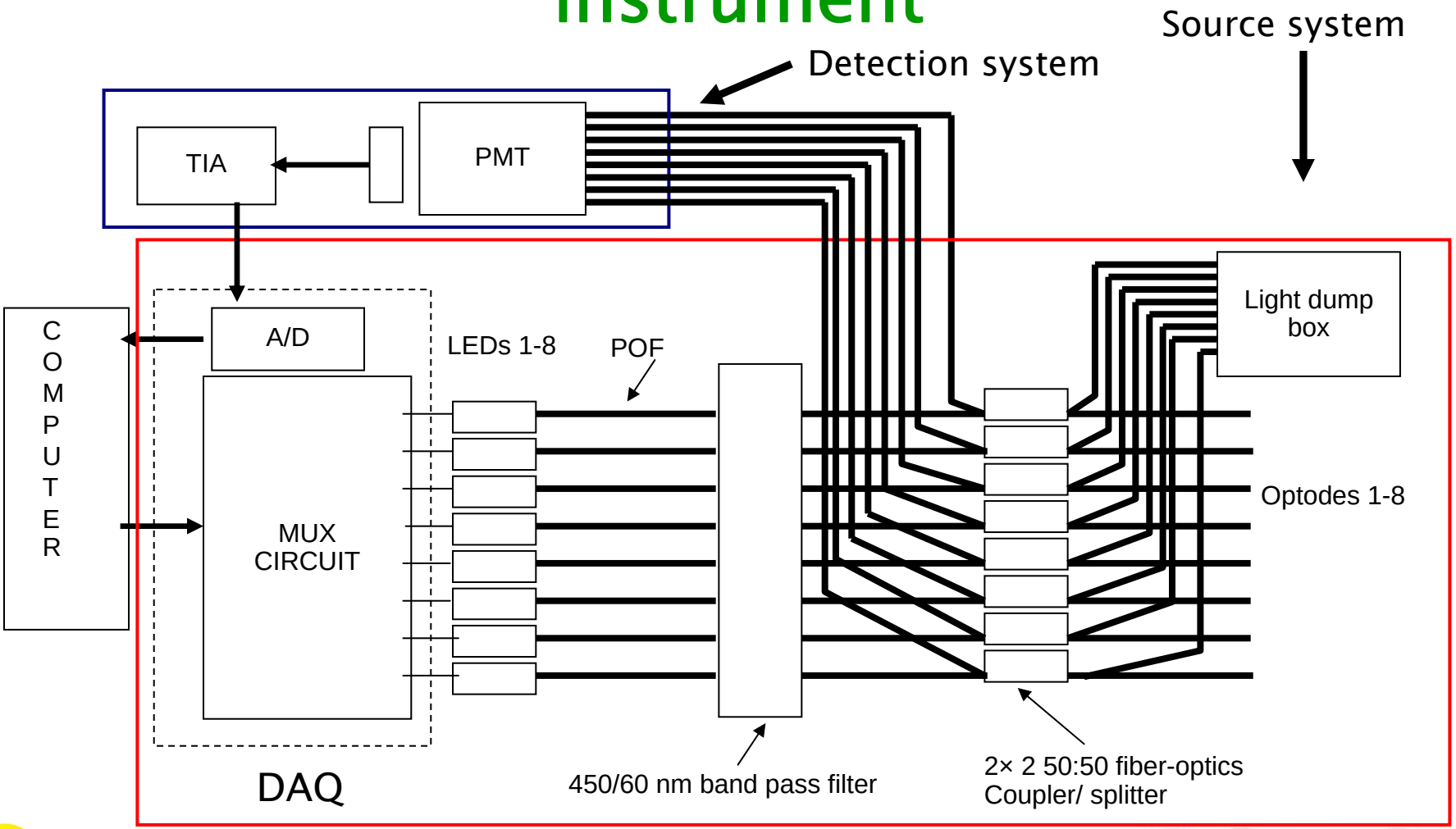

# Circuit schematic of the excitation source

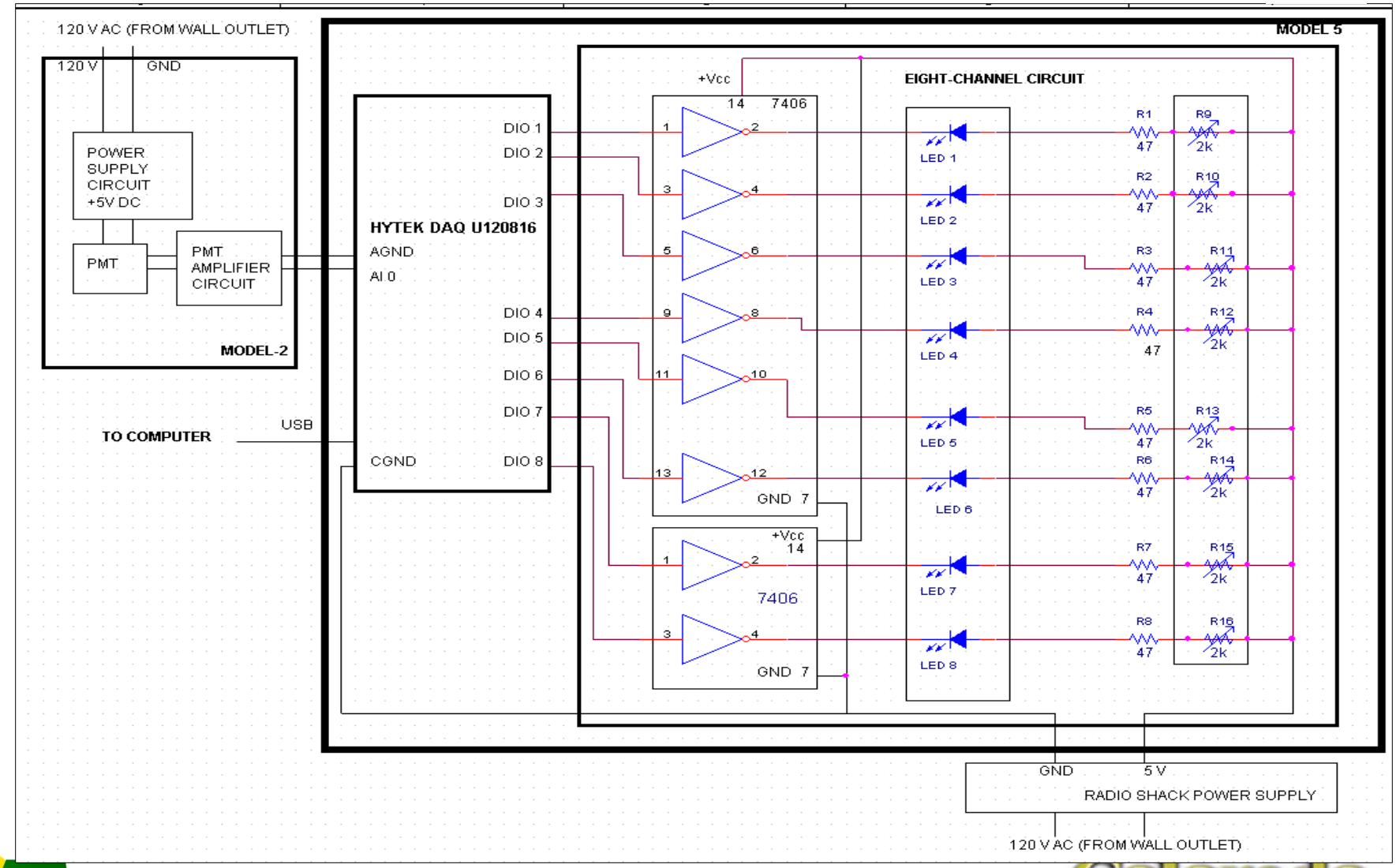

# The excitation source: Top & Front view

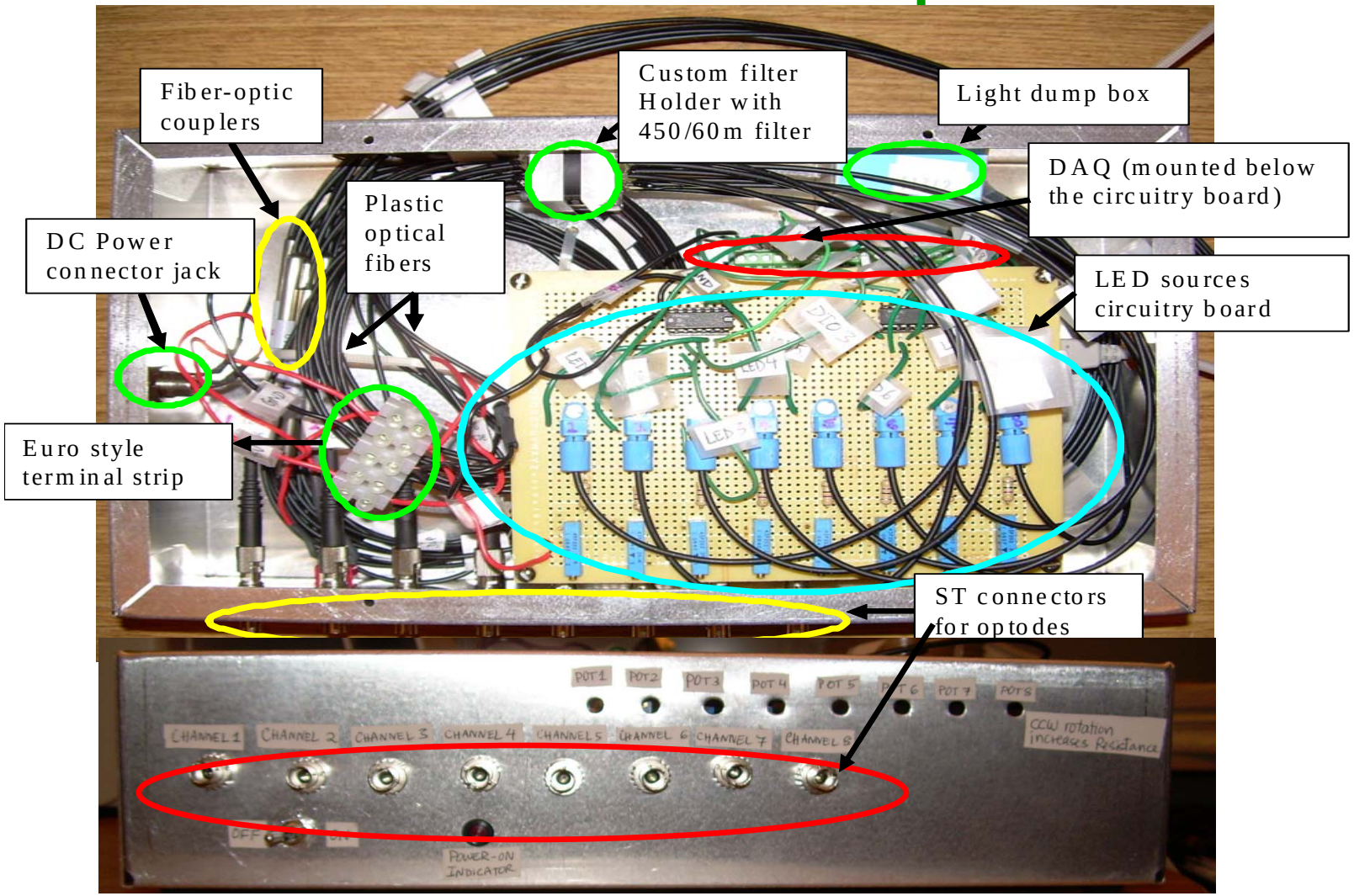

# The detection system: Top & front view

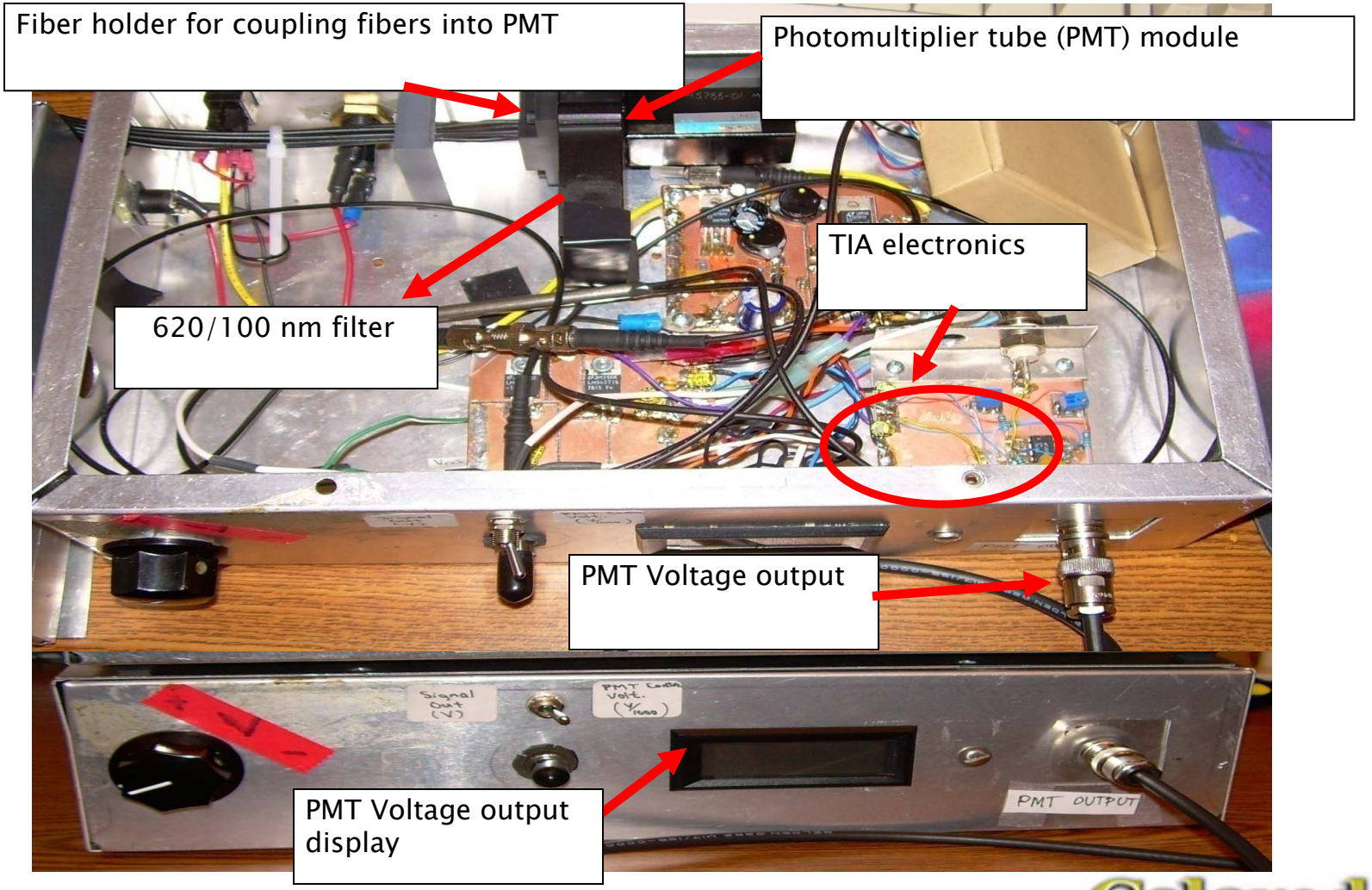

# Front panel of multi-channel LabVIEW vi

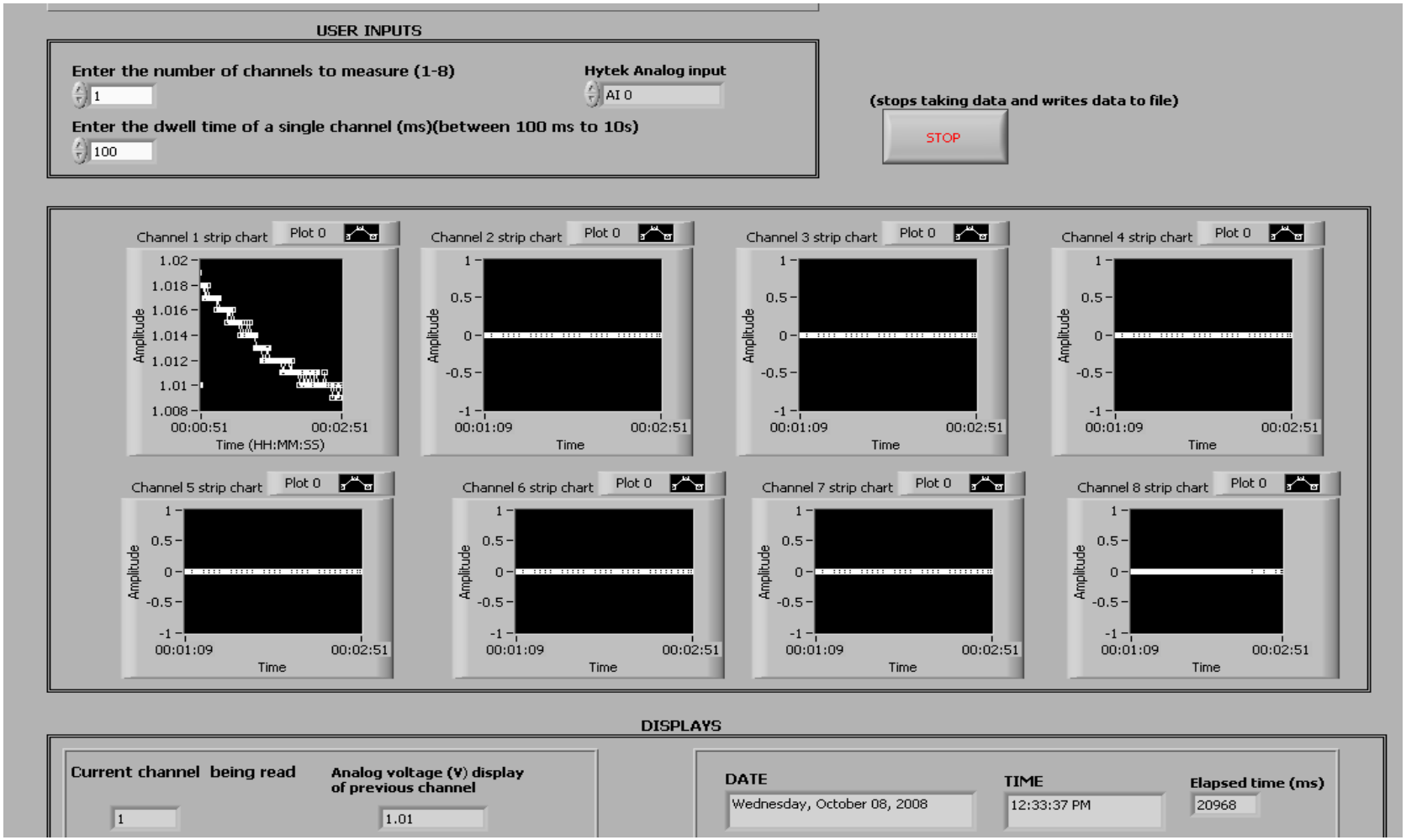

# Electronic channel switching

- Our approach

  - Electronic switching & no moving parts
  - Economical as costs only one-half as much as a switched system

- A software program was written in LabVIEW as interface with the DAQ

  - Multiplex and demultiplex signals to and from the PMT
  - Take traces of phosphorescence (V) versus time for every channel
  - Save data at the time of collection
  - Collect dark voltage after each cycle of measurement

# Outline

- Introduction and motivation
- Background
- Design and fabrication of multi-channel source and integration with detection system
- **Measurements taken with multi-channel sensor instrument**
- Monitoring dissolved oxygen using the multi-channel sensor instrument
- Conclusions and future work

# LED power drop measurements

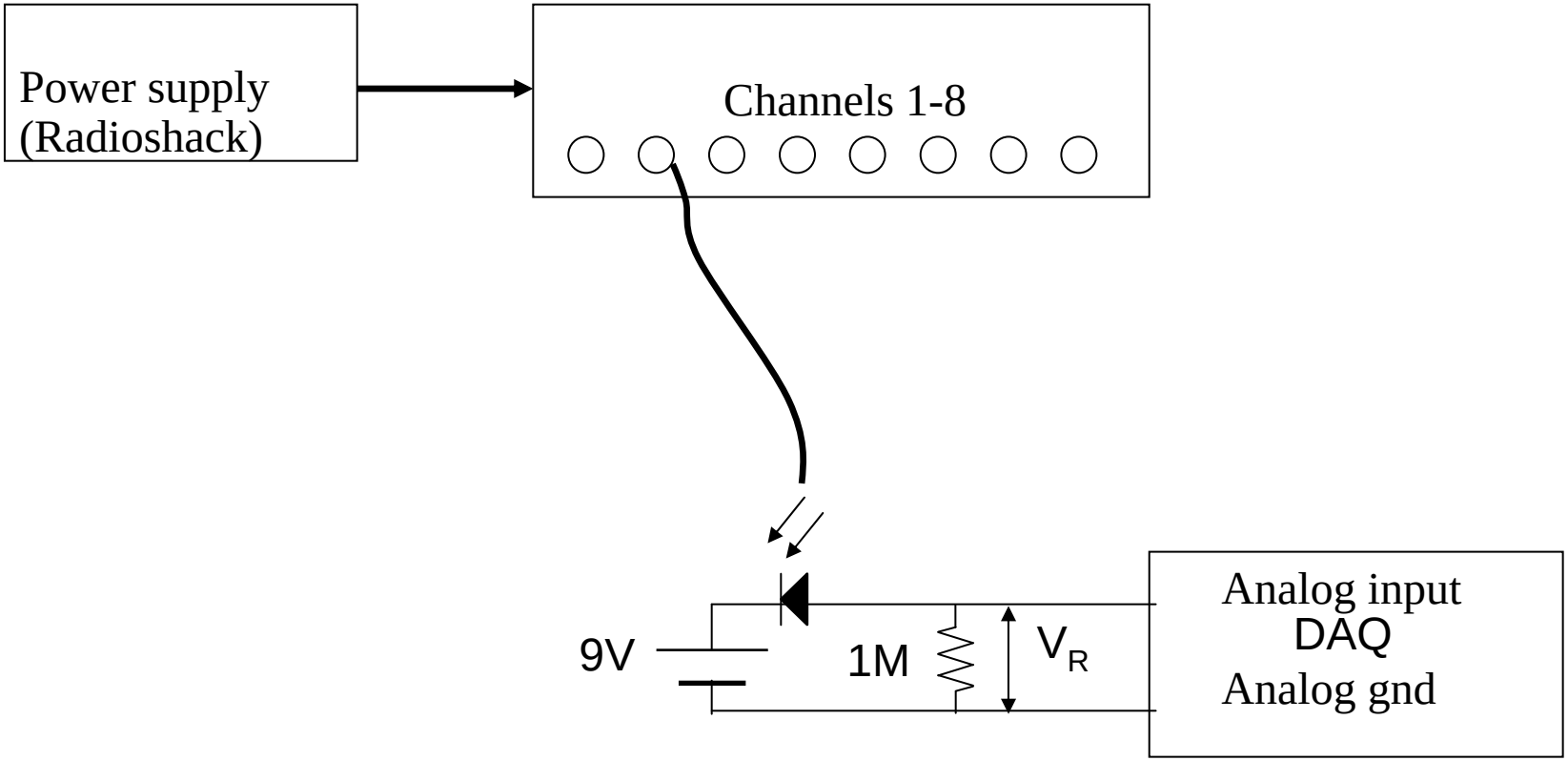


Average power of the LEDs was studied for a few random channels with the ST connectorized photodiode (PDB 504-ST)

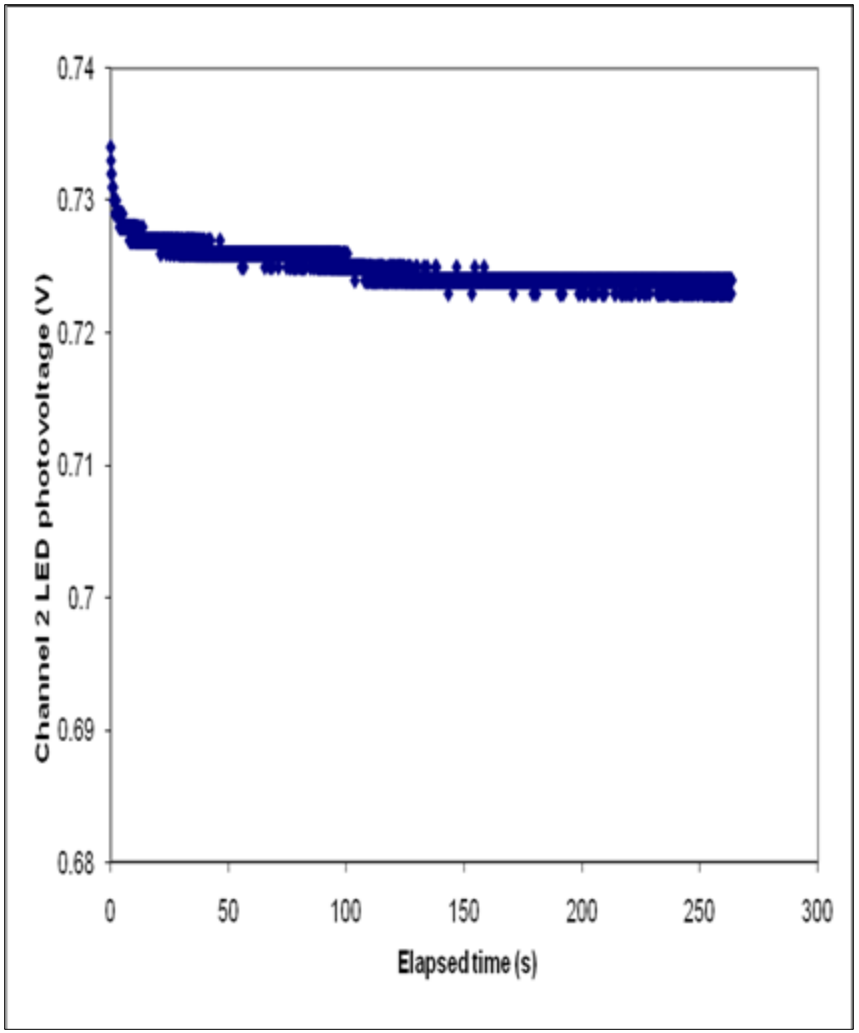


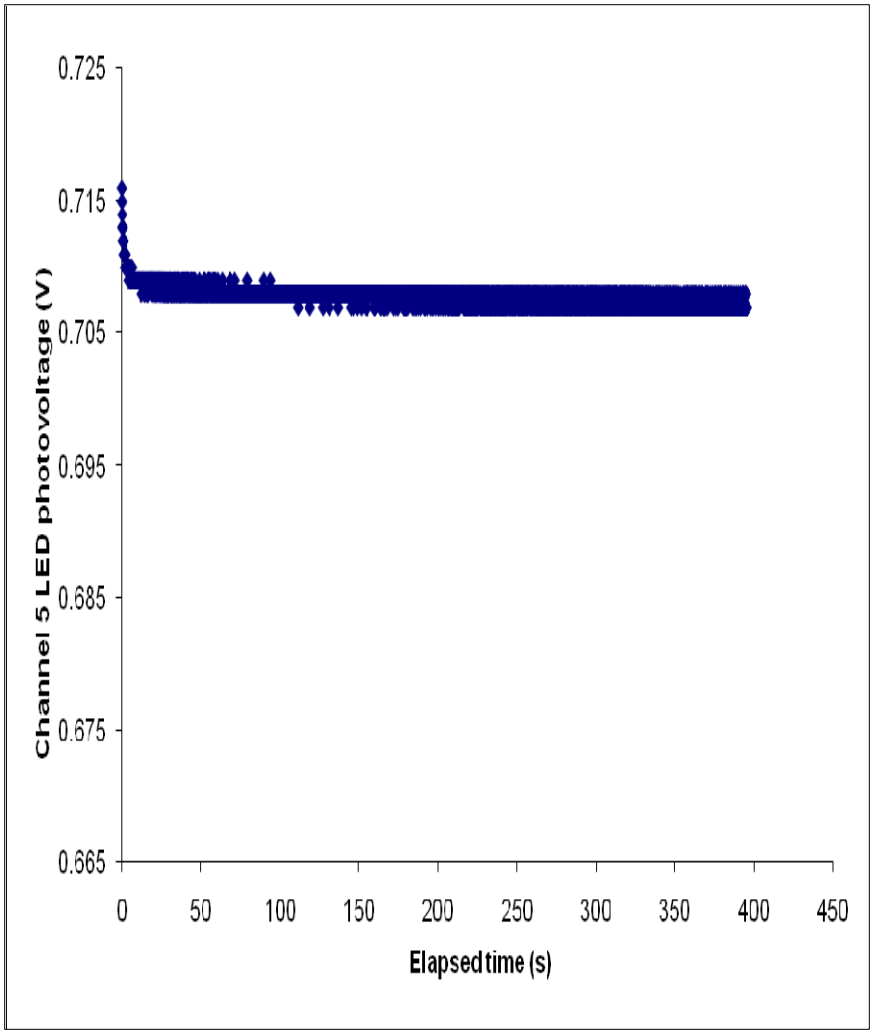


Results indicate a 4-5 minute warm up time

# Summary of data taken for LED average power drop and noise

| Case # | % drop in LED photo voltage | Vpp (mV) | LED dwell time (ms) | Power supply | LED location | Drive current (mA) | Supply voltage (DC) | Resistor (ohm) | ICs | Long Electri cal connection | Shielded against EMI |
|---|---|---|---|---|---|---|---|---|---|---|---|
| 1 | 4.46 | 1 | 100 | radio shack | in multi-channel sensor | 28.6 | 5 V | 1M | present | no | yes |
| | 4.47 | 1 | 500 | | | | | | | | |
| | 4.57 | 1 | 1000 | | | | | | | | |
| 2 | 4.6 | 1 | 100 | radio shack | in multi-channel sensor | 28.6 | 5 V | 1M | absent | no | yes |
| 3 | 0.9 | 1 | 100 | radio shack | in multi-channel sensor | 9.9 | 5 V | 1M | present | no | yes |
| 4 | 5.75 | 1 | 100 | radio shack | in multi-channel sensor | not measure d<28.6 | 7.5 V | 1M | absent | no | yes |
| 5 | 4 | 20 | 100 | HP 6216A | in multi-channel sensor | ~28.6 | 5 V | 1M | present | no | yes |

| | | | | | | | | | | | |
|---|---|---|---|---|---|---|---|---|---|---|---|
| 5 | 4 | 20 | 100 | HP 6216A | in multi-channel sensor | ~28.6 | 5 V | 1M | present | no | yes |
| | 4 | 20 | 500 | | | | | | | | |
| | 3.2 | 20 | 1000 | | | | | | | | |
| 6 | 0.22 | 1 | 100 | battery | external | 9.6 | 9 V | 100k | present | no | yes |
| | 0.36 | 1 | 500 | | | | | | | | |
| | 0.295 | 1 | 1000 | | | | | | | | |

# Conclusions from the experiment

- LED drive current directly proportional to percent drop in LED power
- Presence/absence of other variables had no effect on the percent drop in LED power
- Minimal noise amplitude of 1mV in photovoltage was observed due to minimum resolution of DAQ
- Presence/absence of variables had no effect on 1 mV noise amplitude

# Effect of duration of turn-off times on LED power drop

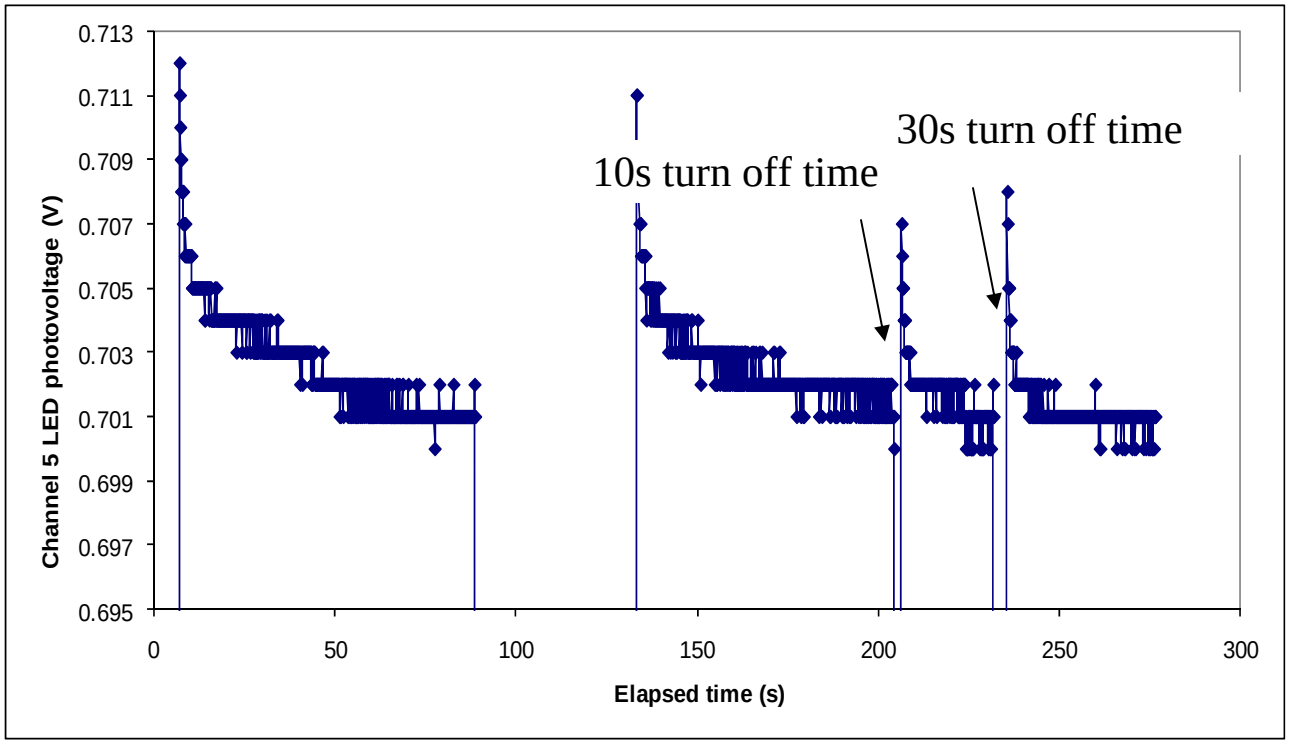


- Smaller the turn-off time, smaller the power drop

# Monitoring long-term stability of LED power

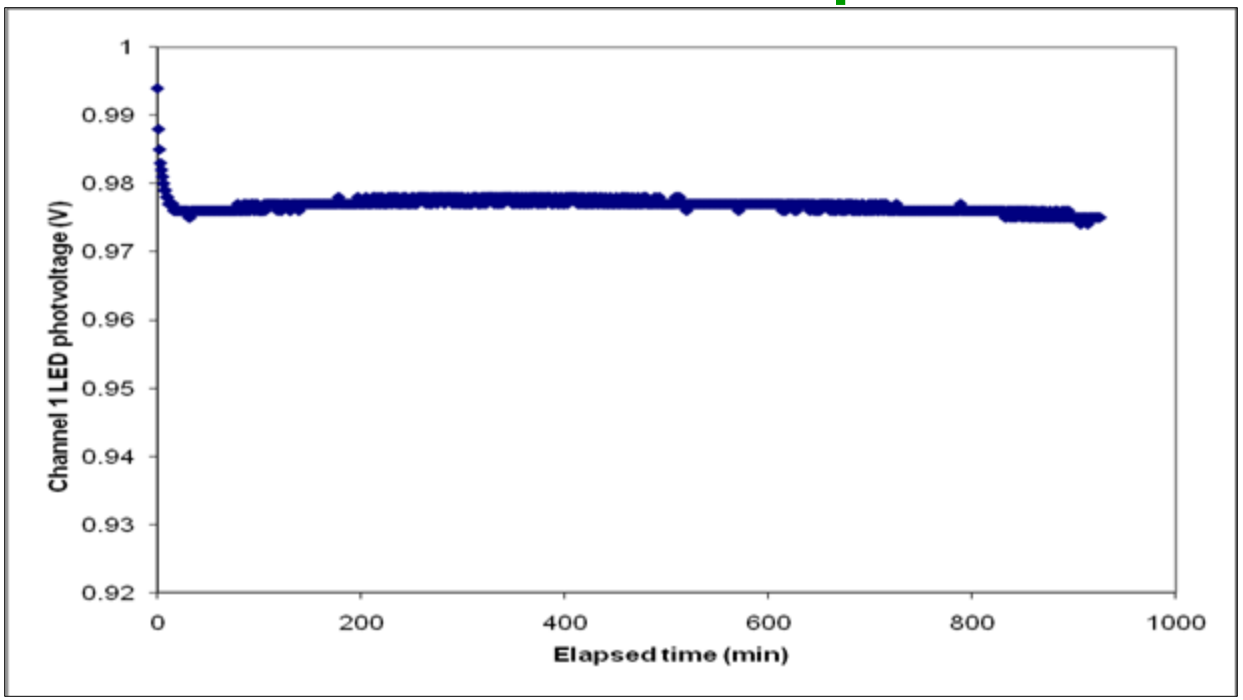


- Measurement taken over 15 hours
- Stable, with negligible fluctuations of 0.3% between 100-700 minutes

# Analysis of source insertion loss channel by channel

**Insertion loss (dB) = 10 * log $_{10}$ (Launched photocurrent / Received photocurrent)**

**Results**: Insertion loss varied from 14.5 dB to 18.5 dB for the channels

Measuring launched photocurrent

Multimeter

Measuring received photocurrent

Multimeter

Case-2

# Detector insertion loss

**Insertion loss (dB) = 10 * log $_{10}$ (Optical power launched into the channel from the front panel / Optical power received by PMT)**

where optical power launched into the channel from the front panel = photocurrent (nA) from fiber coupled red LED measured by photodiode / responsivity of PD @645 nm (A/W)

optical power actually received by PMT= TIA Voltage (V) measured from the front panel/ effective response of TIA & PMT

and effective response of TIA & PMT= (TIA gain of 120 kV/A) * (PMT responsivity of 2* $10^7$ mA/W at 645nm)

**Results**: Insertion loss measured to be between 11 dB to 14.9 dB

# Summary of insertion loss measurements

| CHANNEL 1 | CHANNEL 2 | CHANNEL 3 | CHANNEL 4 | CHANNEL 5 | CHANNEL 6 | CHANNEL 7 | CHANNEL 8 |
|---|---|---|---|---|---|---|---|
| 14.07 ± 0.16 | 13.79 ± .09 | 14.18 ± .03 | 14.54 ± 0.06 | 12.02 ± 0.04 | **14.88 ± 0** | 11.62 ± .04 | **11 ± 0.12** |
| 17.79±.. 0.24 | 16.36 ± 0.34 | 17.34 ± 0.05 | 18.42 ± 0.23 | 18.53 ±1.32 | **14.54 ± 0.05** | **18.8 ± 0.09** | 17.5 ± 0.1 |

Detector insertion loss [Avg (dB) ± Stdev (dB)]

Source insertion loss [Avg (dB) ± Stdev (dB)]

Source insertion loss: ~4 dB difference between strongest and weakest channel

Det. insertion loss:~4.5 dB difference between strongest and weakest channel

# Studying optodes to determine if they are the cause of non-repeatibility

O=optode

1,2,3,4= optodes prepared in August and September 2008

5,6,7,8= optodes freshly prepared on Dec 16 2008

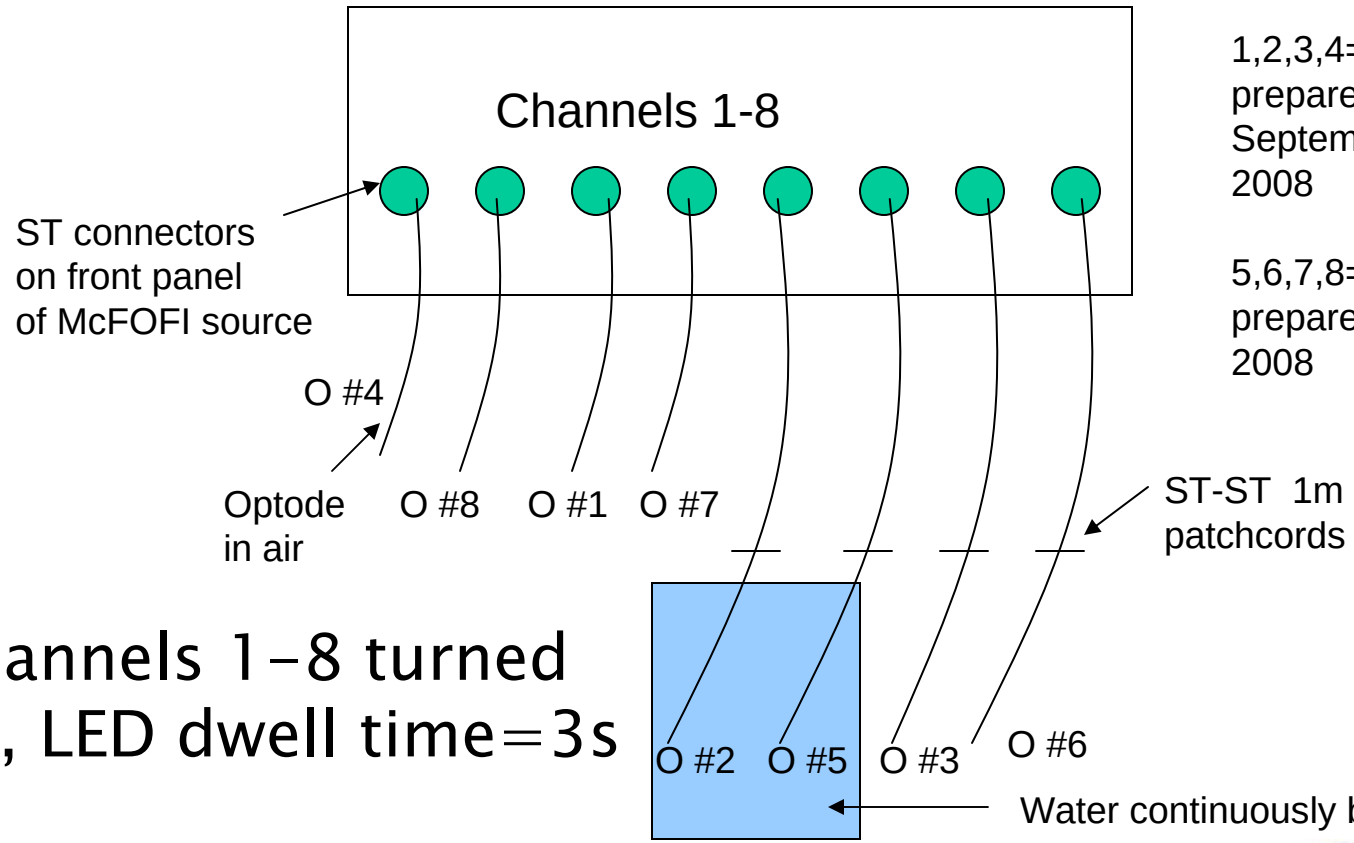


Channels 1-8 turned on, LED dwell time=3s

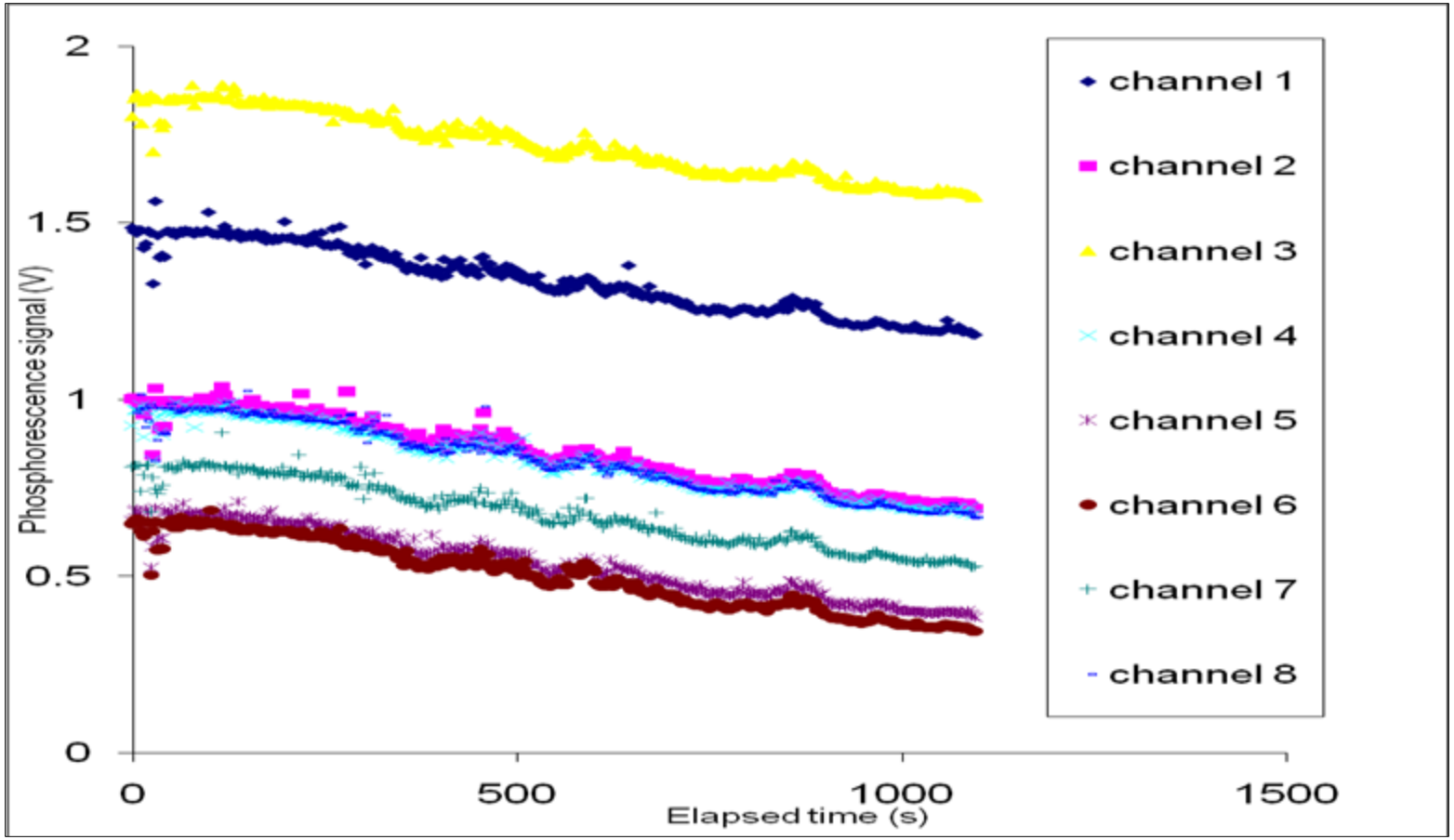


Observation: All optodes drop by approximately 0.3 V.

Can be concluded that these fluctuations were due to a common system issue and not due to aging of optodes.

# Monitoring blue LEDs to check if they are the cause of non-repeatability

Experimental set-up

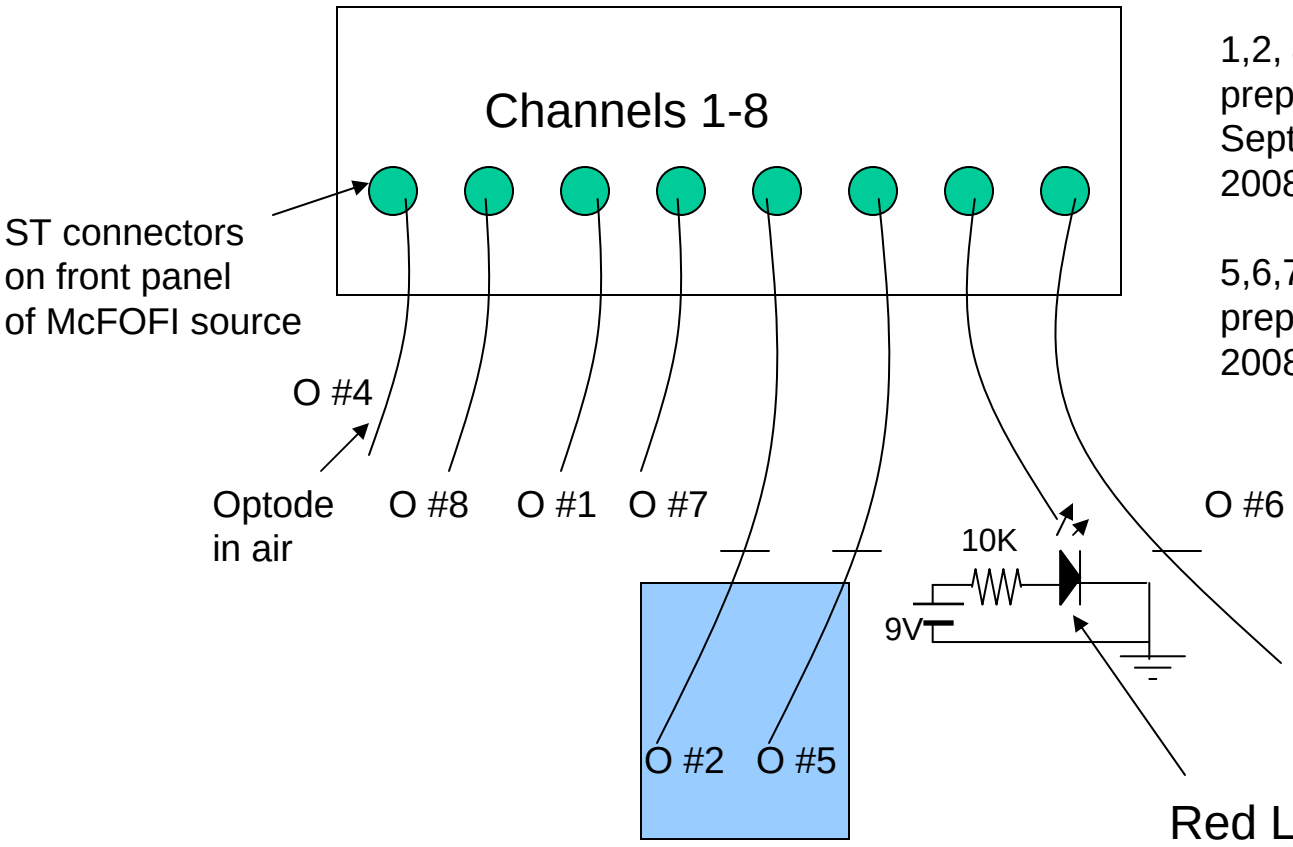


O=optode

1,2, 4=optodes prepared in August and September 2008

5,6,7,8= optodes freshly prepared on Dec 16 2008

Channels 1-8 turned on,
LED dwell time= 3s

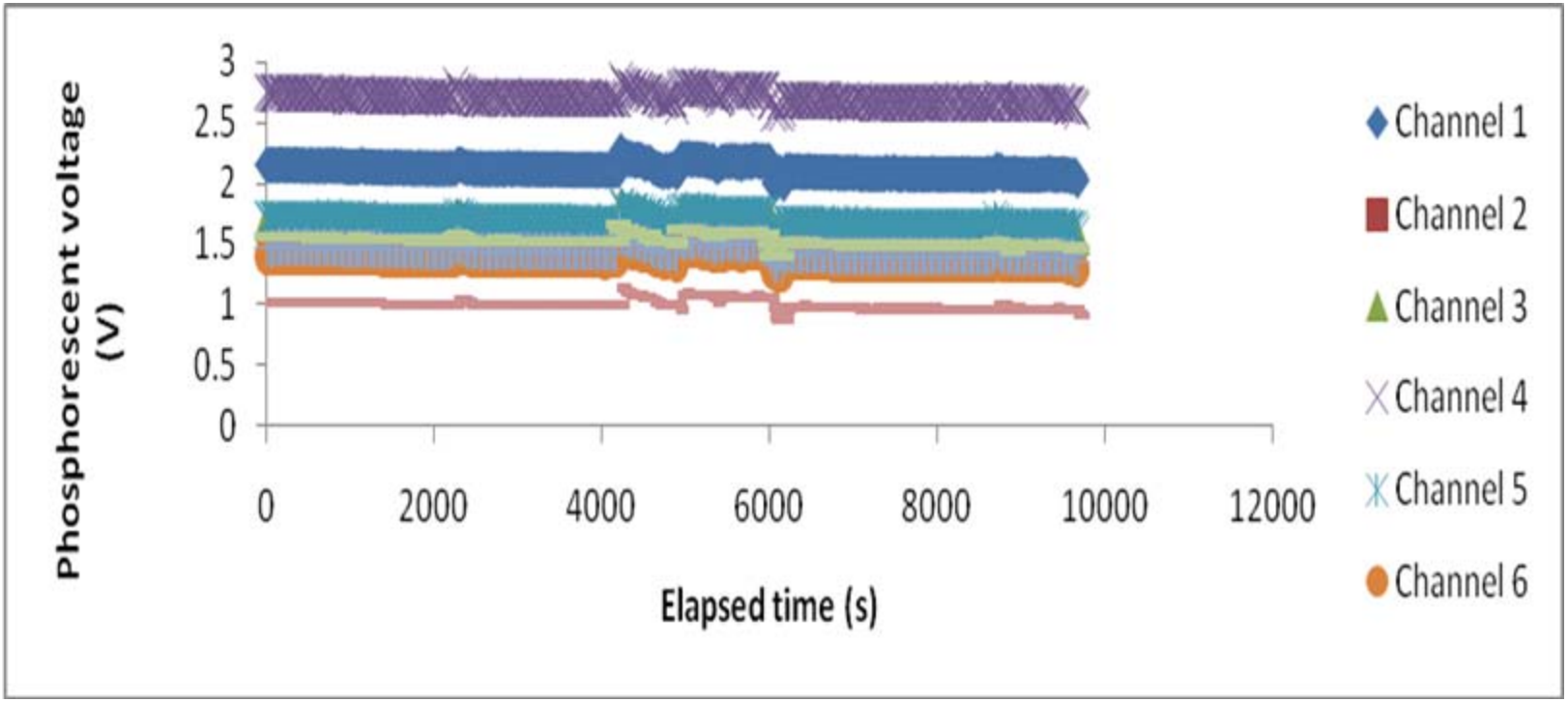


- Since red LED remains on all the time, it is present in all channels.
- It could be possible that fluctuations between 4200-6000s were due to a common system component.
- Not understood if the power of the blue LEDs was actually drifting.

# Testing of transimpedance impedance amplifier (TIA) stability

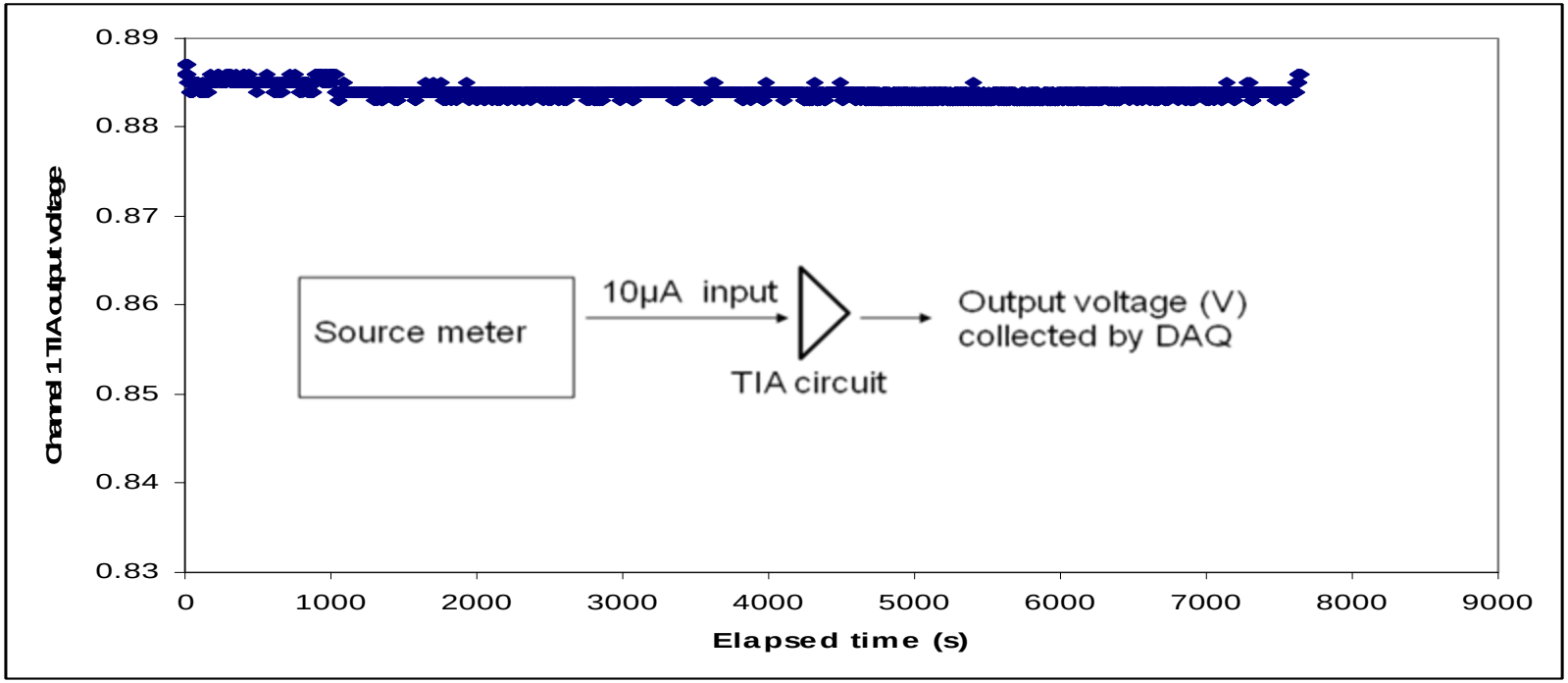


- A percentage drop of only 0.2% in the TIA output voltage observed at the end of the two hours.
  TIA not cause of non-repeatability.
- DAQ didn't cause any fluctuations either.

# Monitoring drift in dark voltage of the multi-channel system

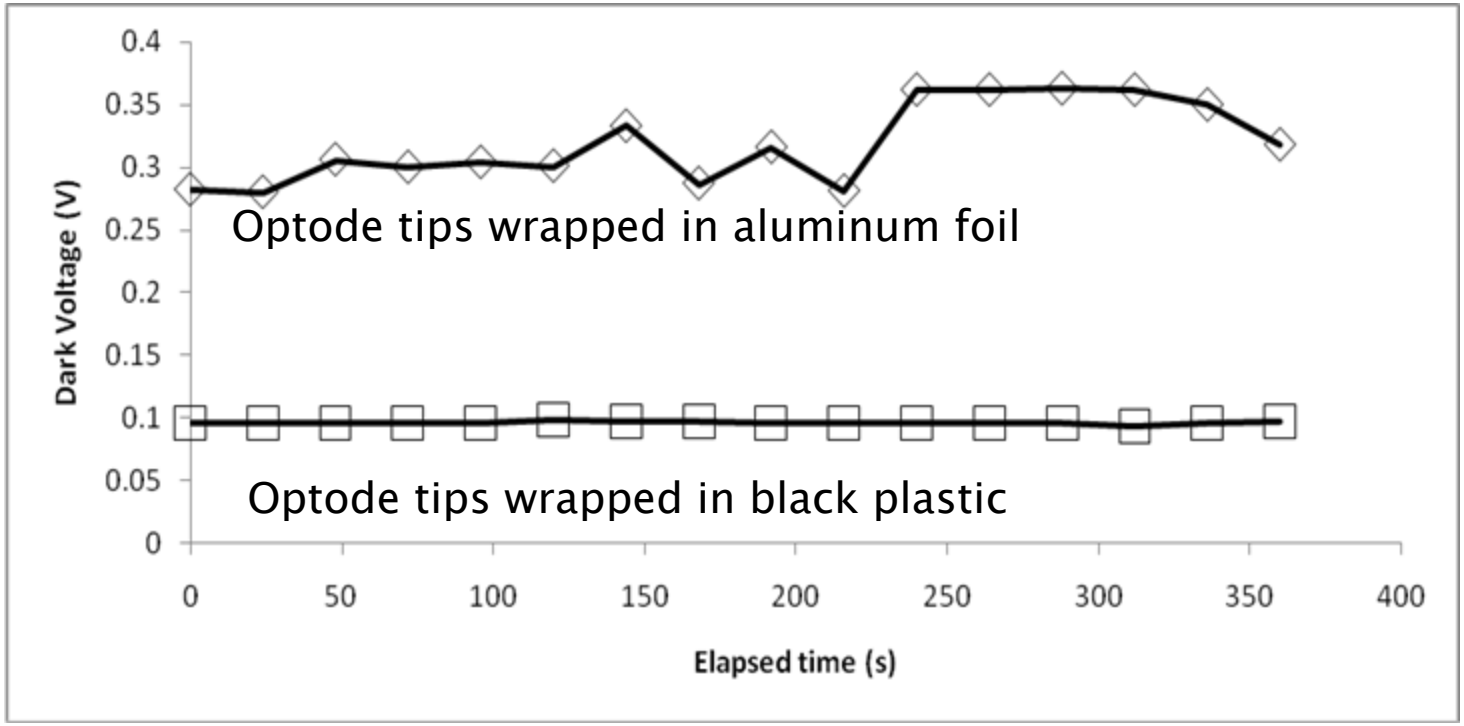


Plot of dark voltage output of the multi-channel system measured by the PMT, with a dwell time of 3s

Dark voltage a significant source of non-repeatibility

# Studying attenuation in a ST-ST POF patchcord

| | Channel 1 (V) | Channel 2 (V) | Channel 3 (V) | Channel 4 (V) | Channel 5 (V) | Channel 6 (V) | Channel 7 (V) | Channel 8 (V) |
|---|---|---|---|---|---|---|---|---|
| With 1m ST-ST Patchcord | 0.48 | 0.46 | 0.44 | 0.44 | 0.39 | 0.39 | 0.39 | 0.31 |
| Without 1m ST-ST Patchcord | 0.84 | 1.04 | 1.01 | 0.93 | 0.85 | 0.90 | 0.86 | 0.95 |

<u>Conclusion:</u>

Phosphorescence signal (no 1m patchcord connected to optode) was two to three times larger than phosphorescence when a 1m patchcord was connected to optode

# Measurement of system crosstalk

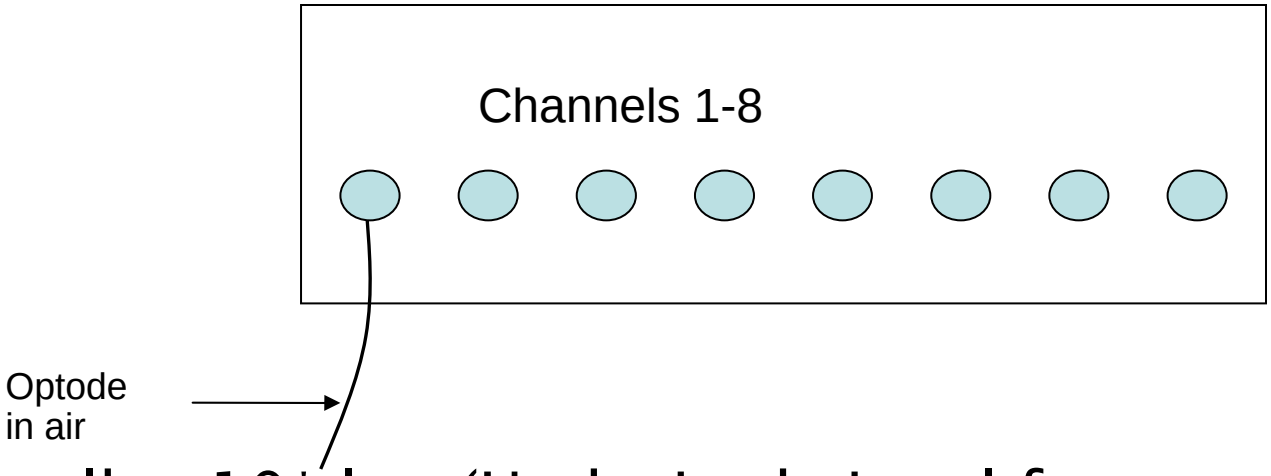


- Crosstalk= 10* log (Undesired signal from neighboring channel/desired signal)
- Crosstalk for channels: -8.4 dB to -12 dB.
- Cross talk not symmetric.

# Measurement of Uniformity

$$\text{Uniformity} = (1 - \text{RSD}) * 100\%$$

Uniformity calculated to be 89.4%.

$$\text{Uniformity} = [(\text{Min}+\text{Max})/2] \pm \text{difference}$$

where difference= Max- [(Min+Max)/2]
=[(Min+Max)/2] - Min

Uniformity= 0.987 V ± 0.274 V

# Outline

- Introduction and motivation
- Background
- Design and fabrication of multi-channel source and integration with the detection system
- Measurements taken with multi-channel sensor instrument
- <u>Monitoring dissolved oxygen using multi-channel sensor instrument</u>
- Conclusions and future work

# Experimental set-up for taking measurements with Cole-Palmer DO meter

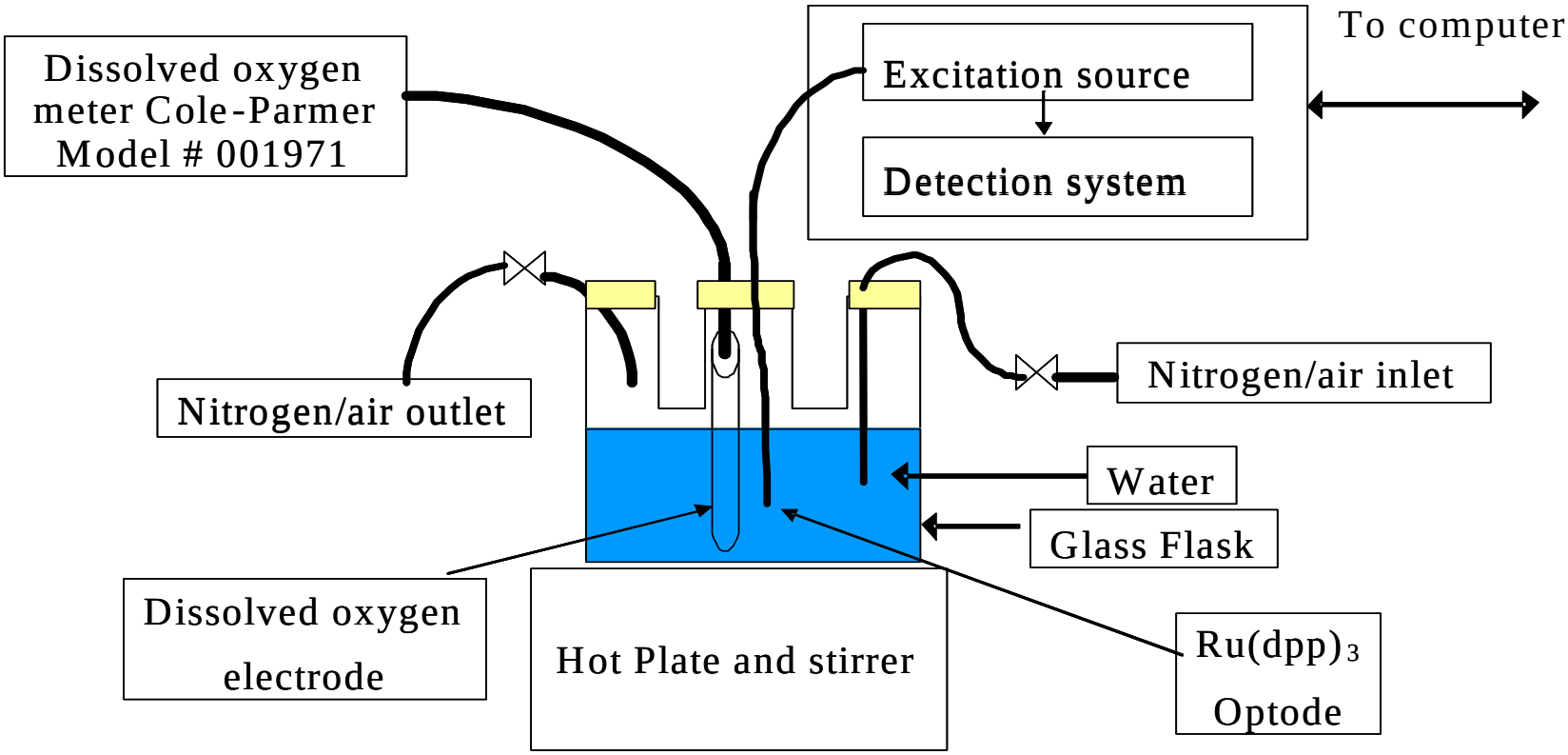

# Measurement Set 1

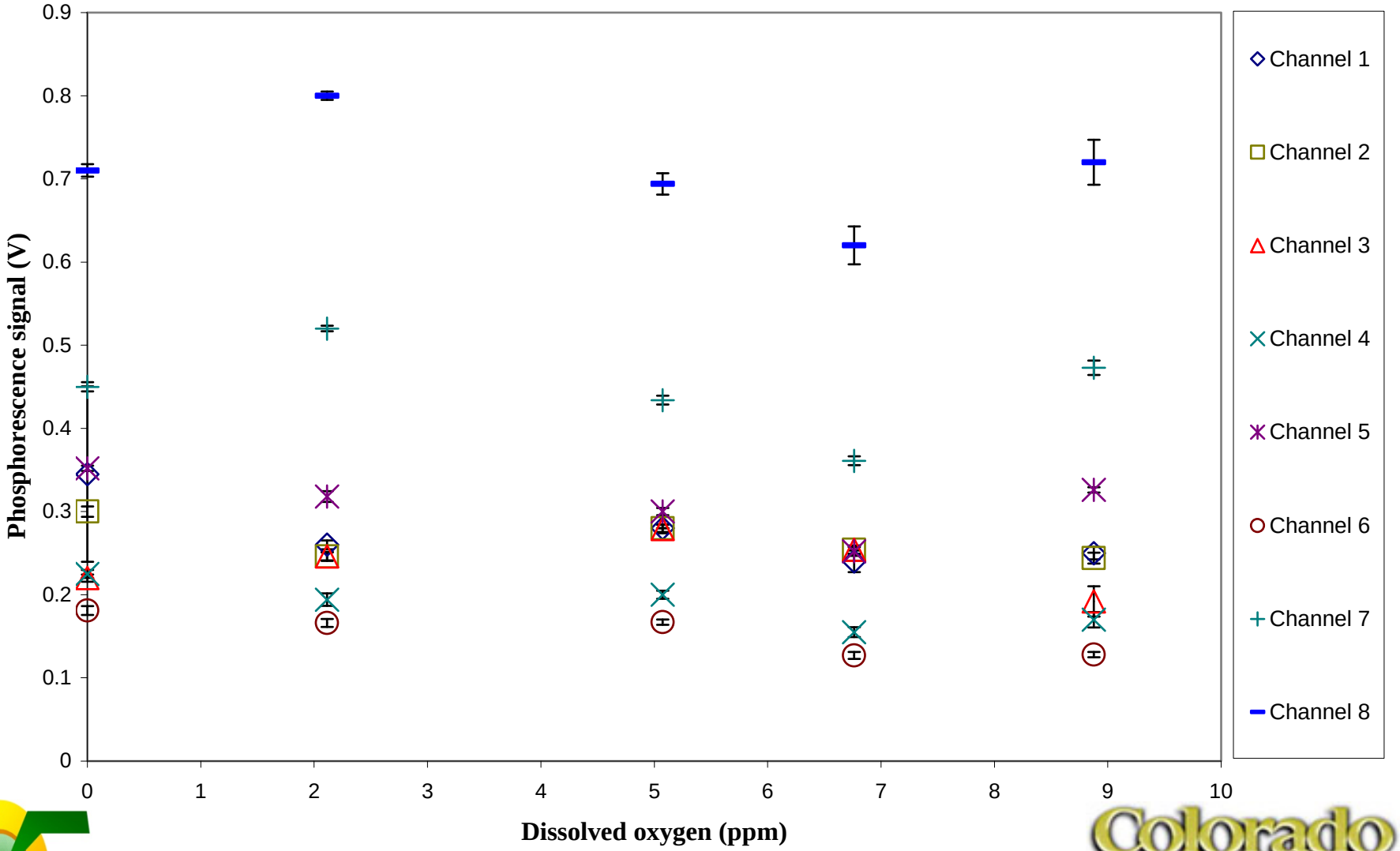

# Measurement Set 2

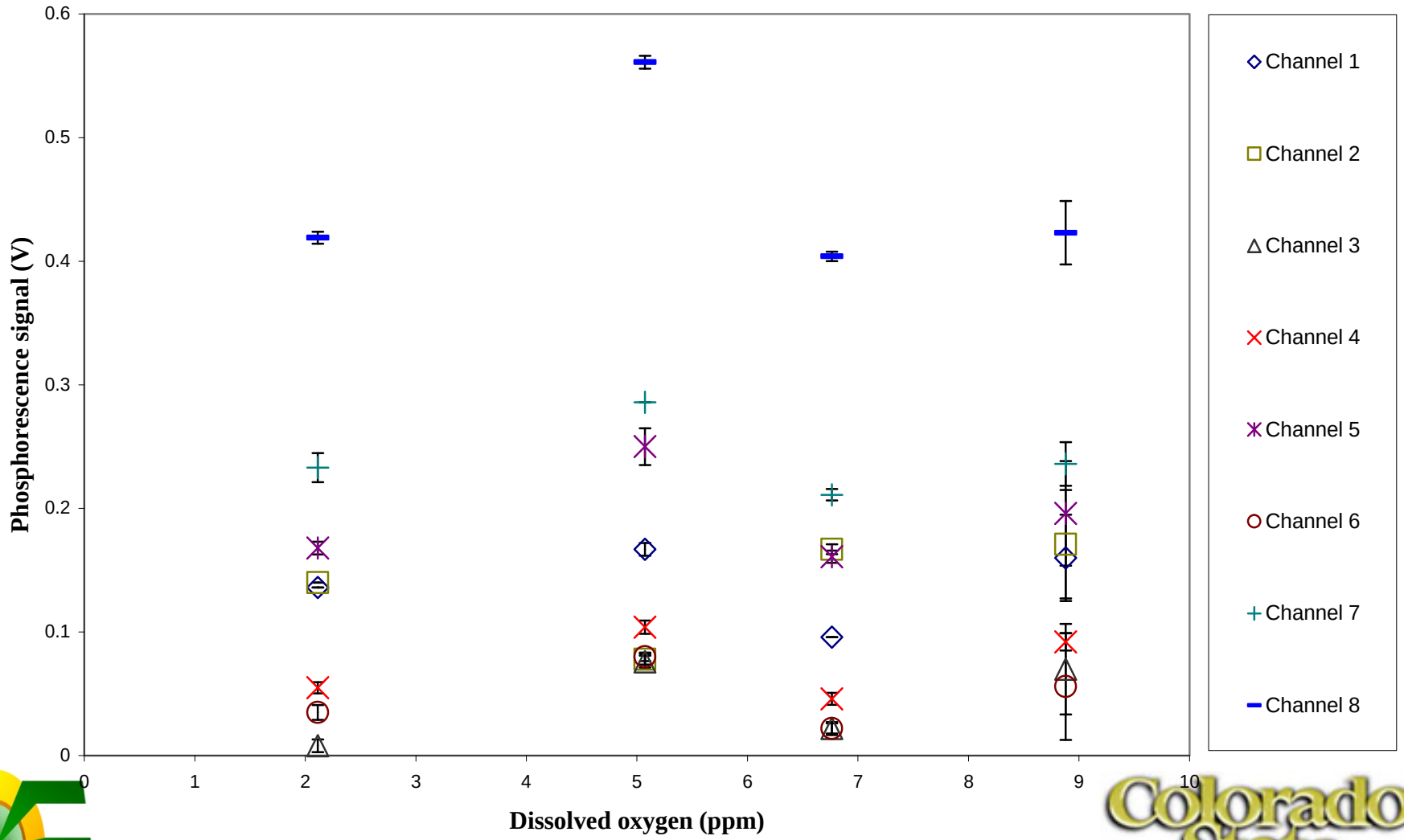

# Experimental set-up for taking measurements with BioFLO-III DO meter

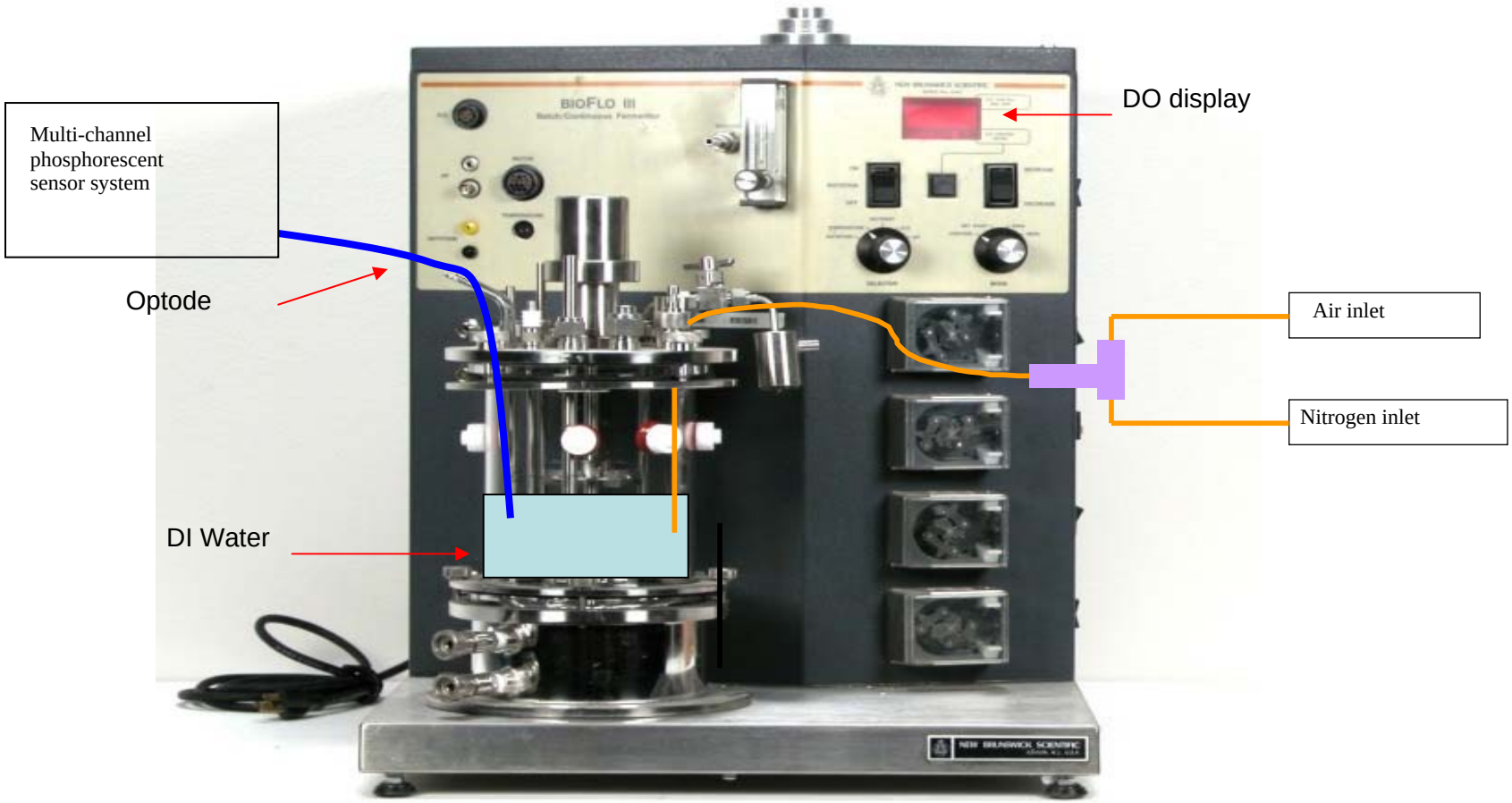


Copyright © 1999-2007 Artisan Scientific

Modified from http://www.artisan-scientific.com

# Measurement Set-3

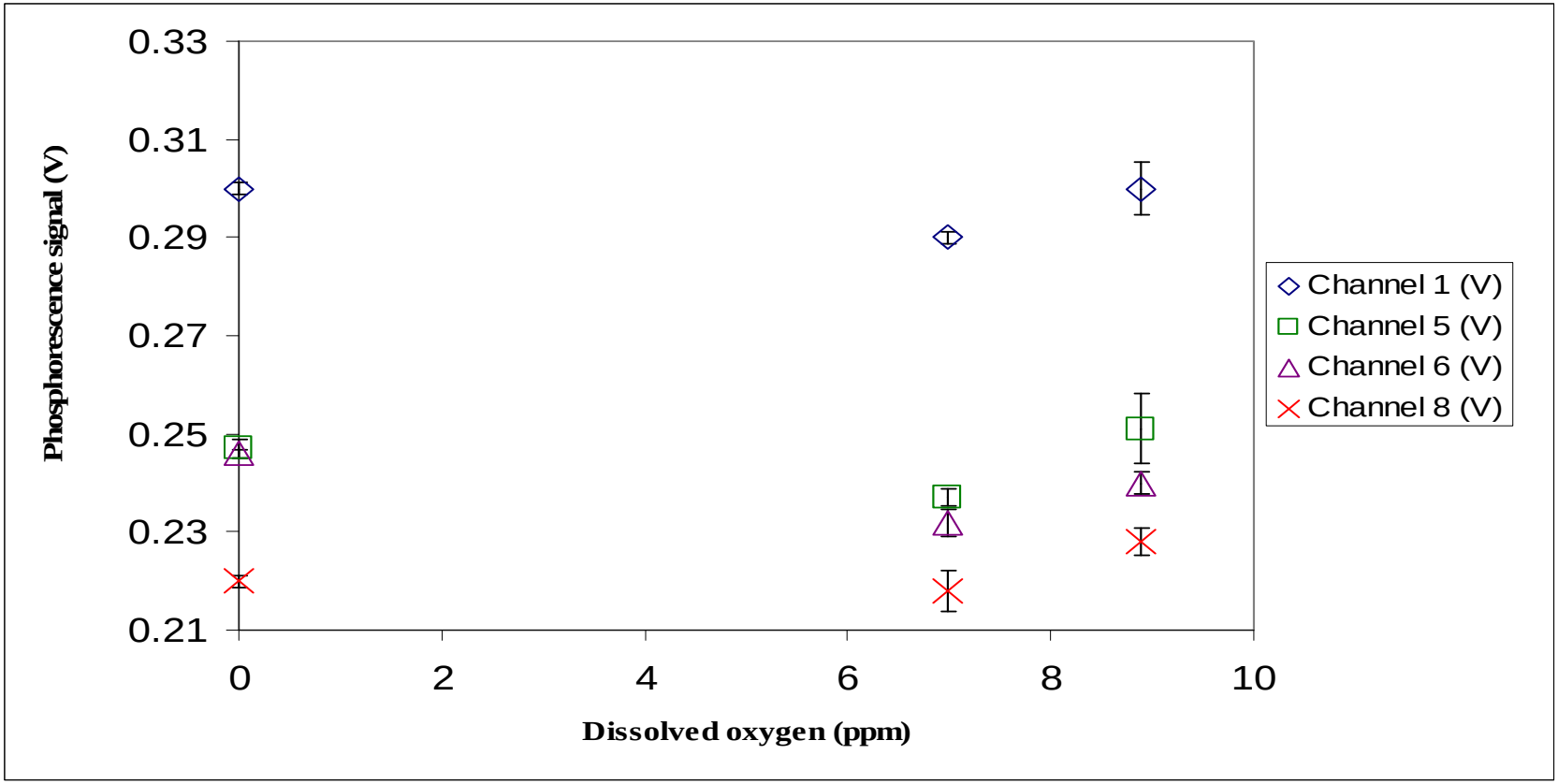

# Front panel connections to multichannel source

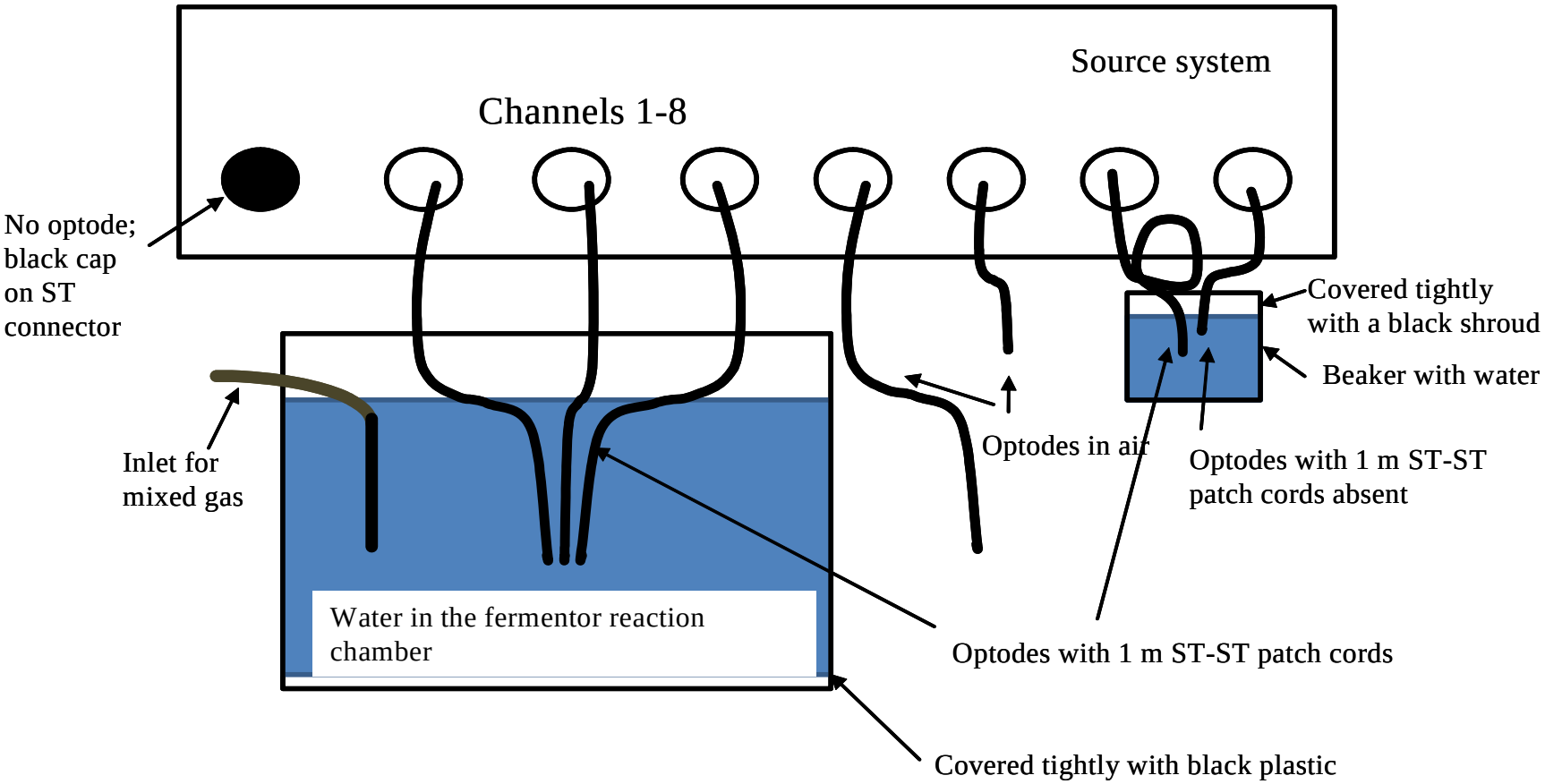

# Data obtained after shielding experimental apparatus, Set-4

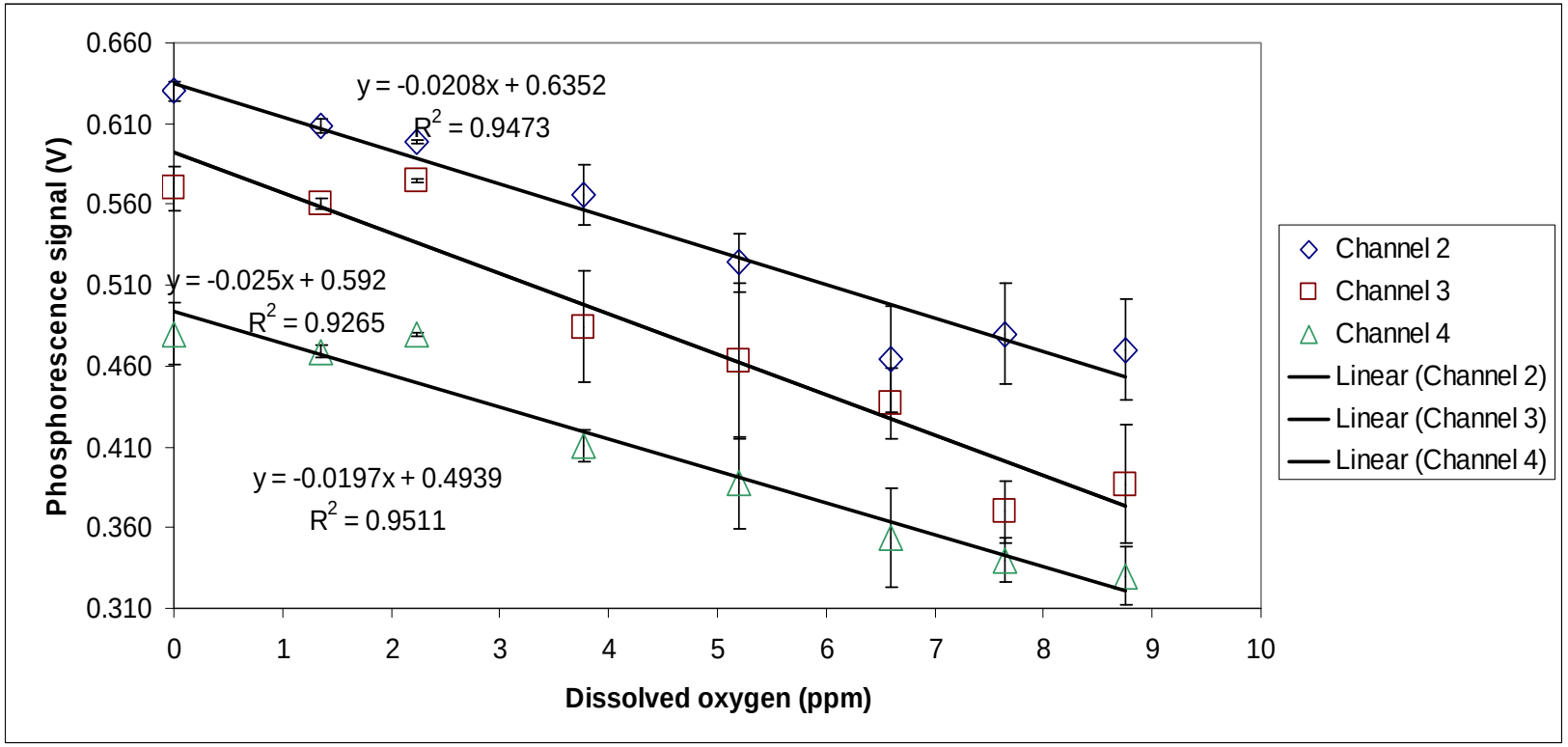


Sensitivity approx. 0.02 V/ppm

Limit of detection measured to be 2 ppm

# Experimental set-up for taking measurements with YSI 5100 DO meter

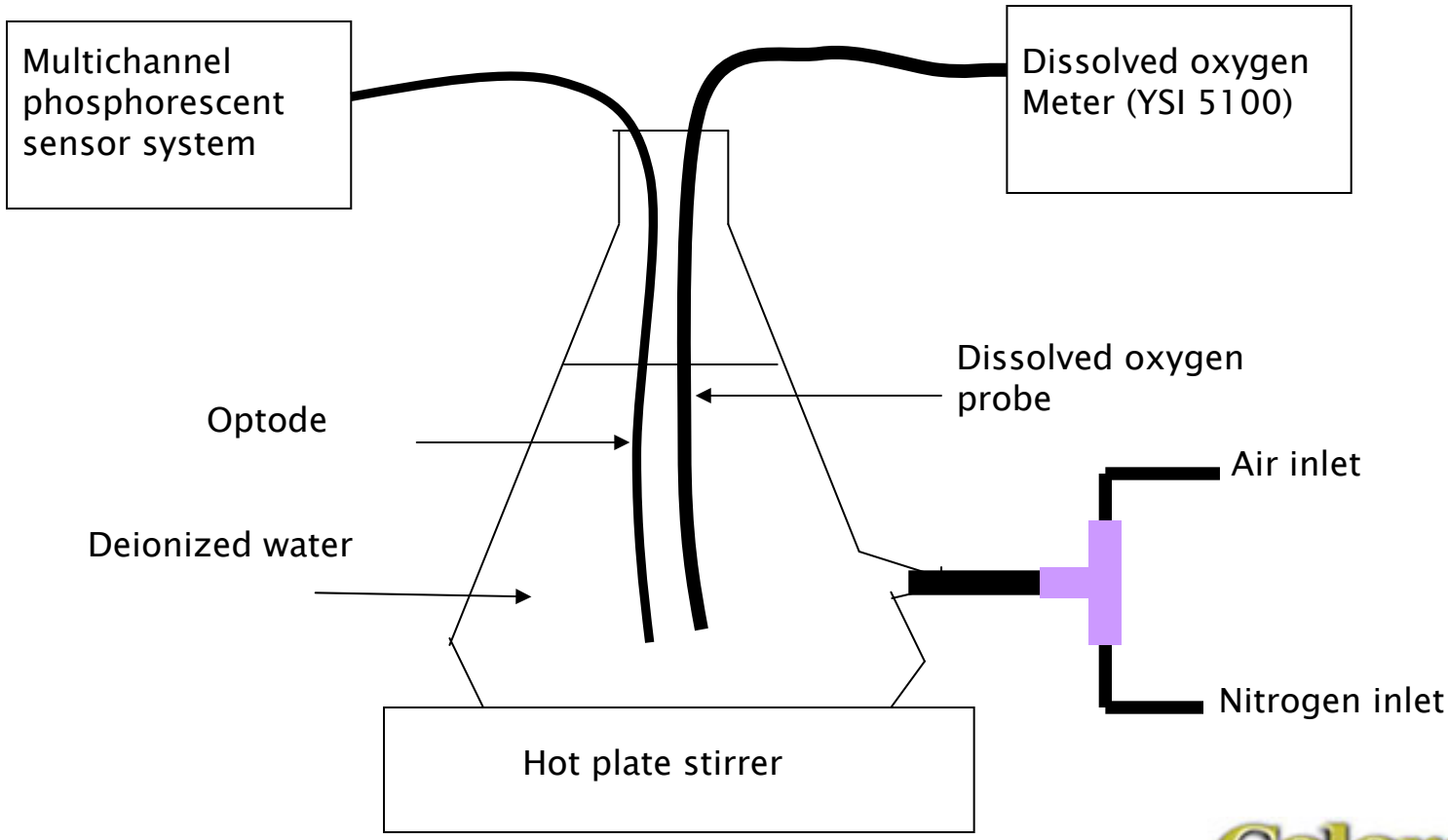

# Data obtained with the YSI meter, Set-5

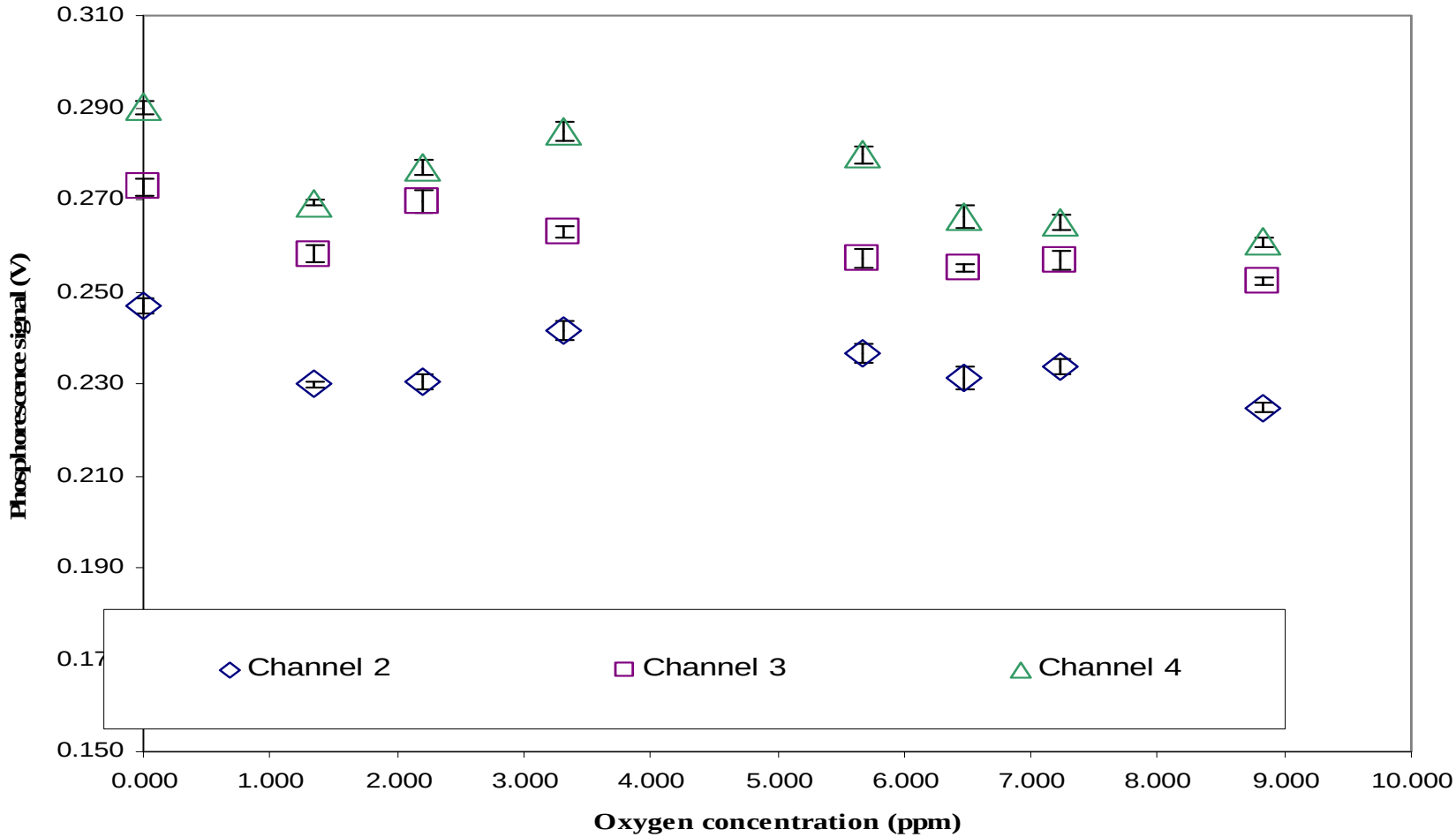


Data points had $R^2$=0.3 to 0.7.
Not completely linear as expected

# Outline

- Introduction and motivation
- Background
- Design and fabrication of the multi-channel source and integration with the detection system
- Measurements taken with the multi-channel sensor instrument
- Monitoring dissolved oxygen using the multi-channel sensor instrument
- <u>Conclusions and future work</u>

# Conclusions

- A multi-channel fiber optic sensor for dissolved oxygen monitoring was fabricated and tested
- Cost -effective electronic time division multiplexing technique was used instead of fiber optic switches
- Future Application: Ground water quality monitoring
- Parameters like cross talk, uniformity, sensitivity, LOD were investigated
- LOD: 2 ppm
  Sensitivity: 0.02 V/ppm
- Source insertion loss: between 14.5 dB to 18.8 dB
  Detector insertion loss: between 11 dB to 14.9 dB
- System crosstalk: -8.4 dB to -12 dB

# Future work

- Continuous monitoring of oxygen over long period is suggested with multiple optodes and calculation of parameters like LOD, sensitivity

  Limited literature on these aspects: only single optodes discussed

- Optoelectronic system modeling and simulation

- Optodes integrated with biosensors in the future

# Acknowledgements


- Thanks to

  - Dr. Kevin Lear
  - Students, Optoelectronics Group, ECE
    Sean Pieper, Weina Wang, Rashid Safaisini, Rongjin Yan, Bob Pownall, Santano Mestas, Wesley
  - Dr. Diego Krapf, ECE
  - Bob Adame, Physics
  - Dr. Ken Reardon, Dr. David Dandy, CBE
  - Zhong Zhong, Tara Schumacher, Tim Gonzalez, Prafulla Shede, CBE

Thanks……..