Thesis Presentation for:

DESIGN AND IMPLEMENTATION OF A COMPACT HIGHLY EFFICIENT 472KHZ RADIO FREQUENCY GENERATOR FOR ELECTROSURGERY

Submitted by
Gerald M. Eberhardt
Masters of Science Electrical Engineering
Summer 2011

Rev 2

Presentation Overview

- Design Target
- Key Findings
- Conclusions
- Future Directions

Design Target

- Joint adventure with CSU and Covidien
- (Primary Thesis Work) Covidien sponsored the work for a Electrosurgery Generator
- (Earlier Work) CSU Plasma High Voltage Generator for Liquid and Gas Loads

Design Target

- Build and Demonstrate A 100-150W RF generator (RFG-1), suitable operation for electrosurgery

- Dynamic Load balancing for:
  - Electrosurgery load (resistive 20 to 500 Ohm)
  - Plasma load (Gas and Liquid) (Reactive)

- Reduce form factor from conservation of valuable operating room space,
  - commercially available unit is 11.1cm x 35.6xm x 43.9cm **(~17347cm^3**)
  - 8.1kg

Target Specifications for Electrosurgery Generator

Parameter	Specification
Input Voltage Range	42 to 60 Vdc
Output Frequency at 50 Ohm	472kHz
Frequency Variation	±23kHz
Max output power	112 Watts at 20 Ohms
Output power derating	13 Watts at 500 Ohms
Output Load Impedance	20 to 500 Ohms
Max output voltage at no load	250 Volts peak to peak
Max output current at full load	2.5A RMS
Efficiency	>80% at full power
Package size	77mm x 102mm x 51mm (**400cm^3**)

Target Specifications for Plasma Generator

Parameter	Specification
Additional Output Transformer	External
High Output Voltage	1000 V RMS
Output Load Impedance	Variable, reactive
Load Type	Plasma, Gas Plasma, Liquid

Electrosurgery Load

Max load (20Ω)

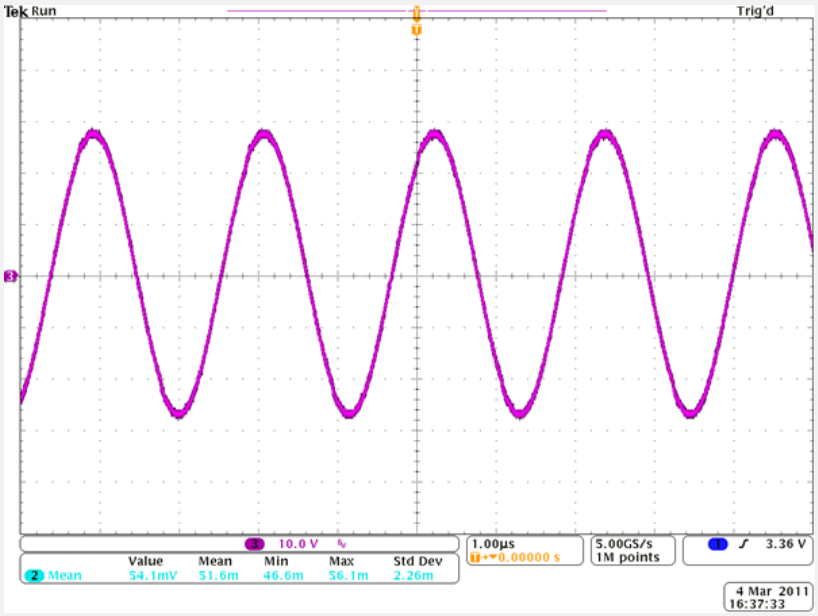

Plasma Load

Gas Load (~512Ω)

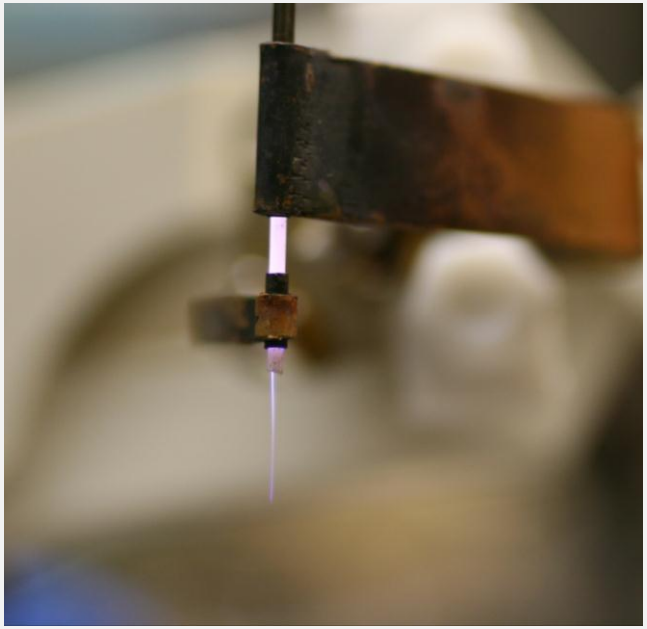

Challenges

- Selection amplifier topology
- Choice of magnetics for operation at 500kHz
- Design high frequency transformer/inductor windings
- Choice of capacitor for resonant operation at 500kHz

Amplifier Selection

- Goal 1
  - Eliminate the need for forced air cooling.
- Means
  - Air movement in operating room is not desired
  - Ultra high efficient topology
- Goal 2
  - To reduce required volume
- Means
  - Space/volume in a operating room is expensive
  - Simple amplifier topology

Amplifier Topologies

- Several amplifier topologies were considered based on simplicity, efficiency, distortion and required volume of space
  - Class-A, Most simple, ~25%, low THD, low volume
  - Class-B, moderate simple, ~78%, moderate distortion, moderate volume
  - Class-AB, moderate simple, ~78%, low distortion, moderate volume
  - Class-C, Simple, ~78%, HIGH distortion, moderate volume
  - **Class-D, Simple, >90%, moderate distortion, low volume**
  - Class-E/F , Simple, >90%, HIGH distortion, low volume
  - **Class-G, Complex, ~78%, low distortion, moderate volume**
- **Final selection was a saturation type of amplifier similar to a Class –D with adjustable supply rails for amplitude control**

Power Source Topologies for Rail / Amplitude Control

- Same selection process as amplifier (Efficiency, Complexity, Volume)
  - Boost, 70-80%, Simple, Low Volume
  - Buck, 80-90%, Simple, Low Volume
  - Buck-Boost, 60-70%, More complex, High Volume
  - **Synchronous Buck, Low 90%, Moderate Complex, Moderate Volume**

- **Final selection was a Synchronous Buck**

HV Transformer Prototype
“Preliminary Design Work”

- Modified Class-D amplifier to produce a 500kHz output.
- Square wave output
- Quick prototype based on a early design target for a high voltage output 1kVpp.

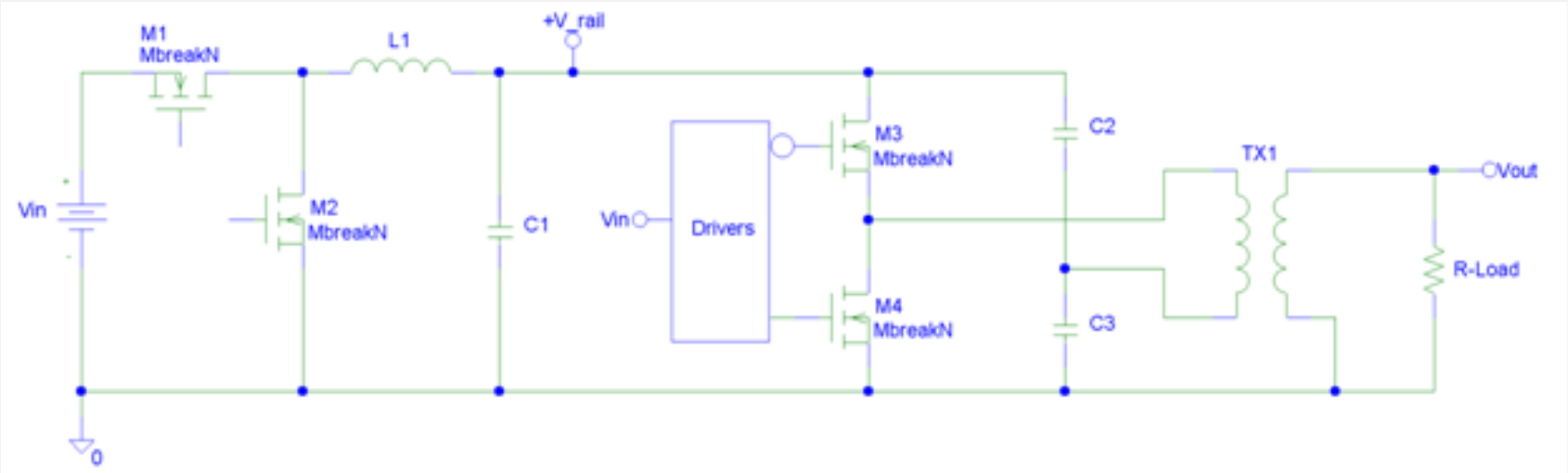

Preliminary Design Work

- Lessons Learned
  - Pro: Proved that rail amplitude control will work
  - Pro: Simplicity
  - Con: High output ringing
  - Con: High output distortion

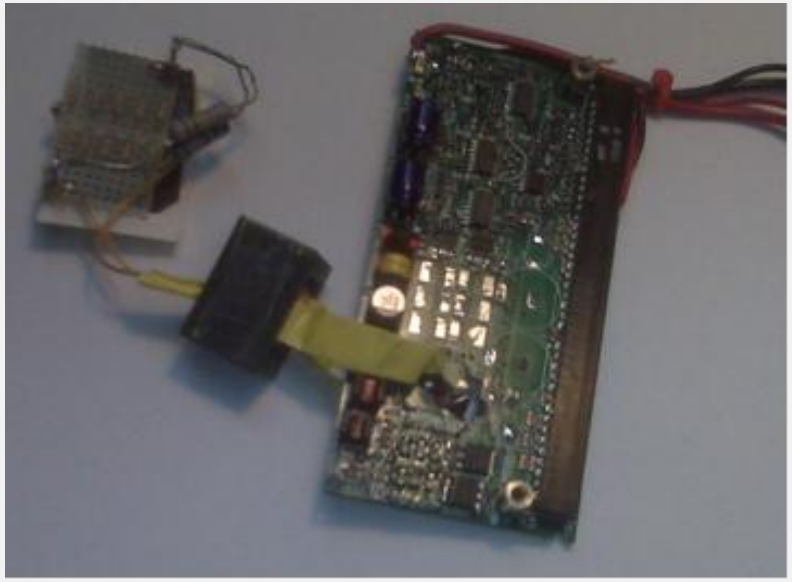

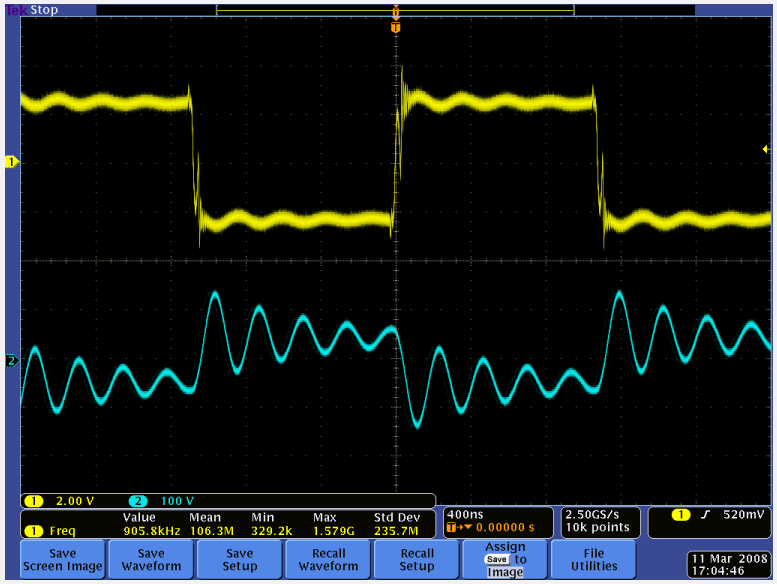

The Concept

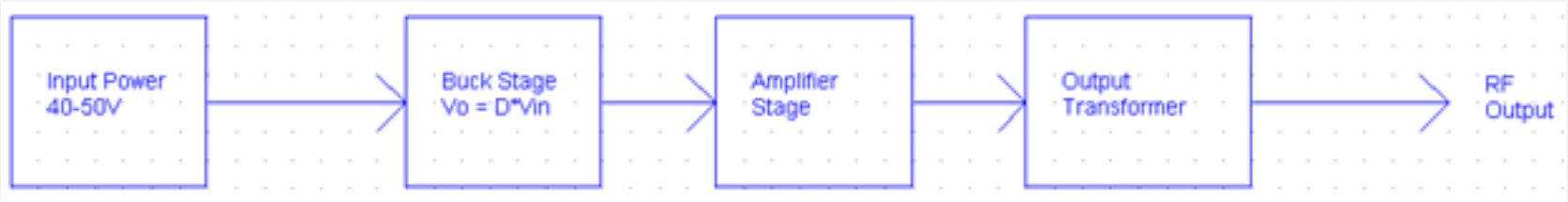

- Synchronous Buck for amplitude control
  - estimated efficiency 92%
- Resonant Amplifier for low distortion and high efficiency
  - estimated efficiency, 95%
- Output Transformer for amplification and isolation
  - estimated efficiency, 95%

- **Total estimated design efficiency, 83%**
  - **Final testing showed ~72%**

Resonant Amplifier Stage

- Operating at resonant means ZVS and ZCS

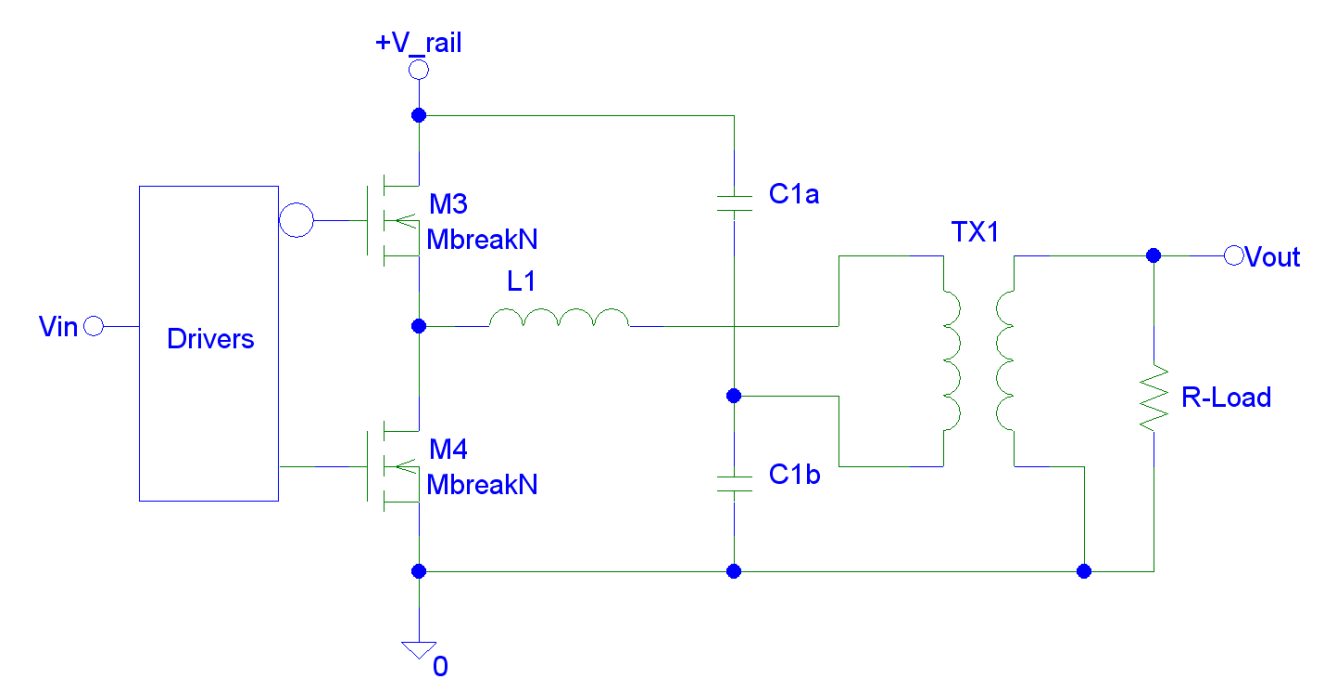

- Resonant point is based on L1, C1, and transformer inductances

Model of Resonant Amplifier

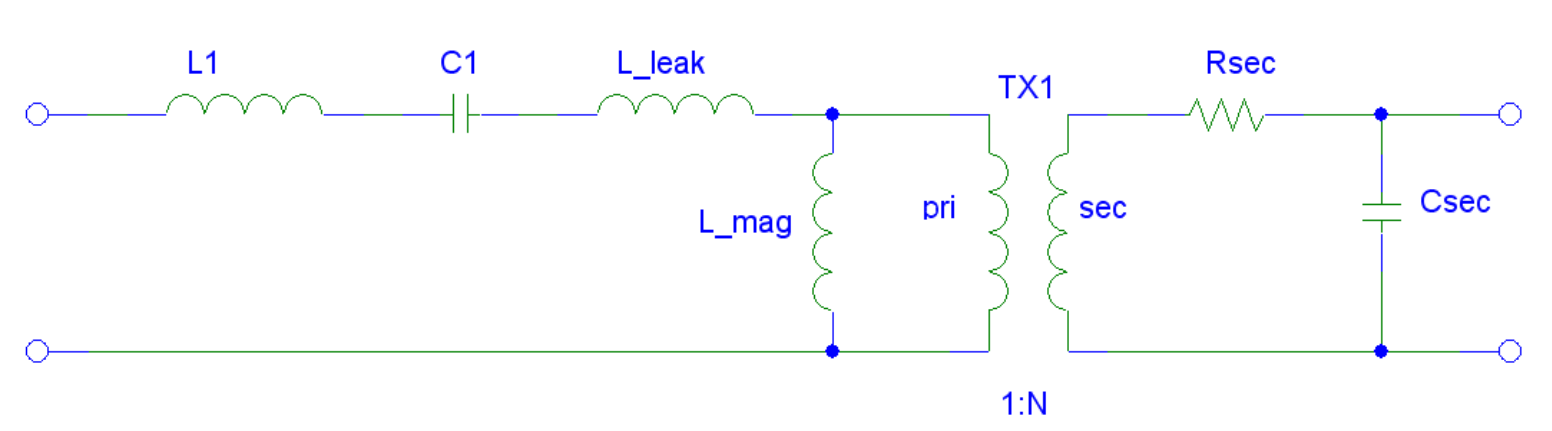

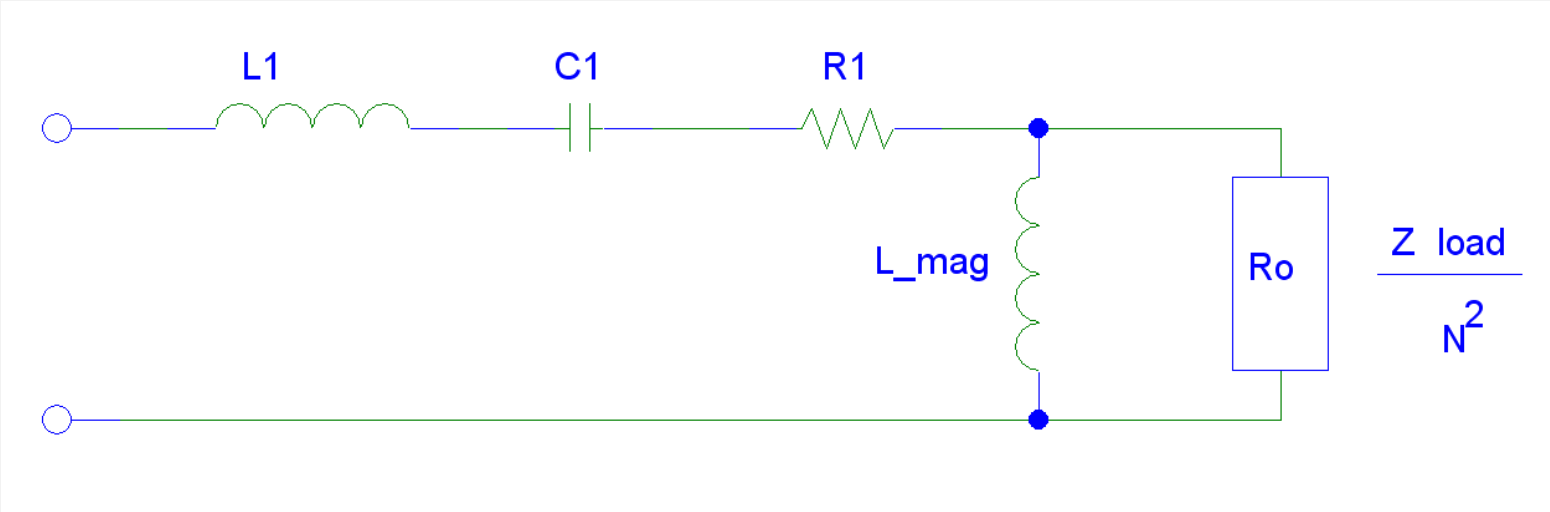

- Z_Load is time variant

Effect of Transformer Magnetization Inductance

- The parallel reactance of the magnetization inductance

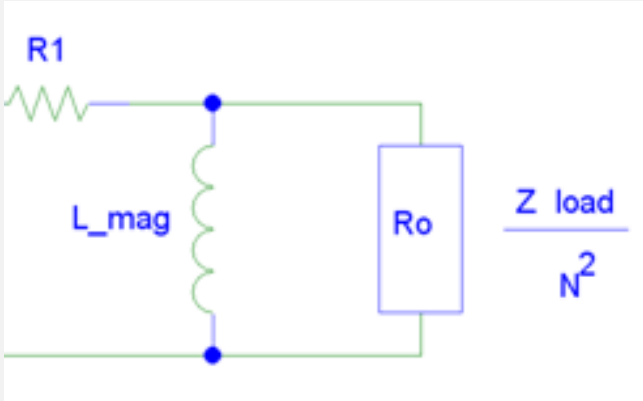

- Increases losses and impacts efficiency at lighter loads

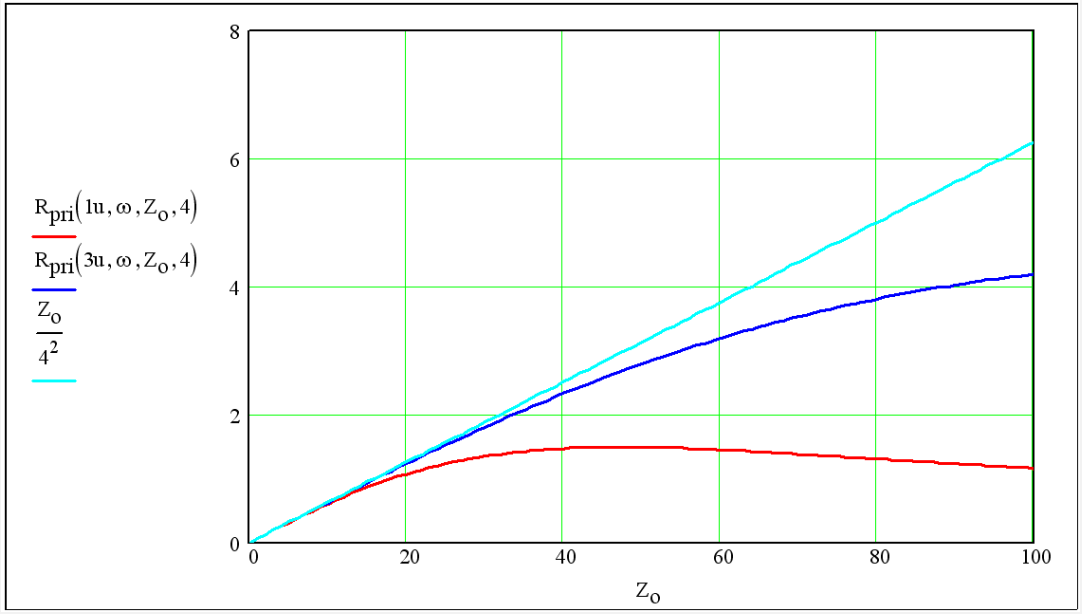

Transformer Challenge, Core

- Key concern is core losses
- Core losses are specified on core losses per volume
- Larger sized cores for use at 500kHz are not that common
- Comparison
- 3F35 is optimum

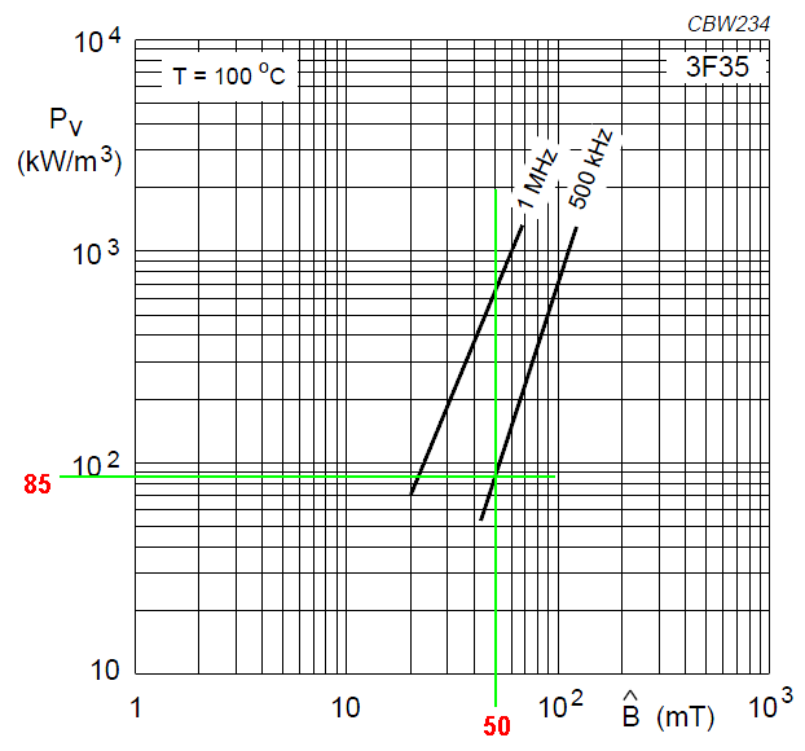

Core Material Ve = 7.64e-6 m³	Loss at 100C 50mT	Loss at 100C 100mT
3C96	1.91 Watts	8.40 Watts
3F3	2.14 Watts	9.17 Watts
3F35	0.65 Watts	5.42 Watts

Transformer Windings Wire

- Must have low AC-resistance
- To minimize low losses to achieve high efficiency
- Optimize wire size for skin-effect (472kHz is 31 AWG).
- 31 AWG would not handle the current
- The approach of use parallel strands for current was tested during the Preliminary Design Work
- It was found at lower strand count the losses were acceptable, but would not be acceptable at the required strand count for this design

Proximity Losses

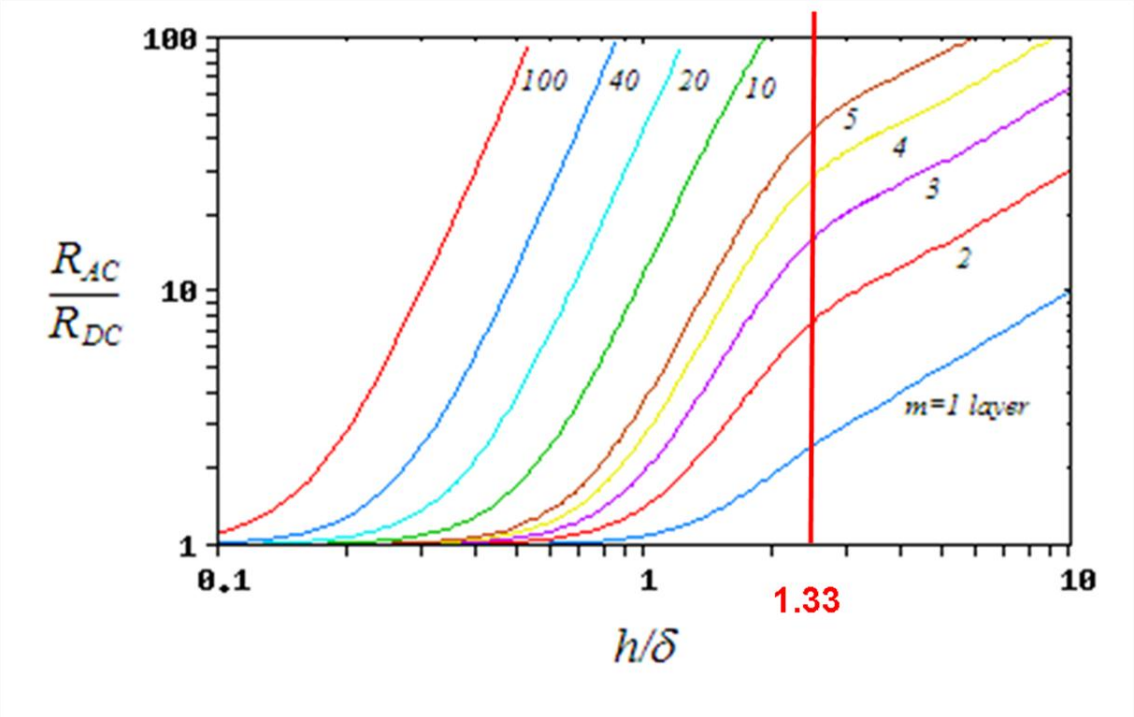

- Optimum wire size for 472kHz is 31AWG
- Several parallel strands are needed for the high current
  - 2.5A RMS ➔ 27 strands
- Resulting in high proximity losses

Solution for Proximity Losses

- Litz-Wire, uses a special weaving and bundling to over come proximity effect

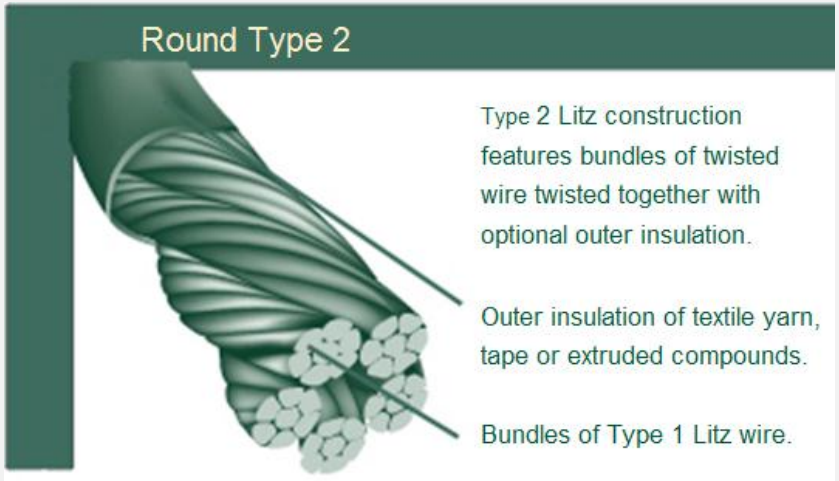

- Using the manufacturers recipe "New England Wire Company"
- Optimum form for 500kHz is Round Type-2
- Litz Wire AC-Resistance
  - Secondary 2.5 A RMS ➔ 5X3/27/44 ➔ 7.60 (AC) Ohm / 1kft
  - Primary 10.0 A RMS ➔ 5X5X3/22/44 ➔ 1.92 (AC) Ohm / 1kft

Transformer, Summary

Core material	Ferroxcube 3F35
Form factor	Ferroxcube ETD34/17/11
Primary wire	Litz 5X5X3/22/44
Secondary wire	Litz 5X3/27/44
Turns Ratio	N = 4
Primary Turns	Tpri = 1
Secondary Turns	Tsec = 4
Primary Inductance	Lpri = 1.85 uH ±25%
Secondary Inductance	Lsec = 29.6uH ±25%
Primary AC resistance	2.279 mOhms
Secondary AC resistance	12.112 mOhms

Series Inductor, Summary

Core material	Ferroxcube 3F35
Form factor	Ferroxcube ETD34/17/11
Winding wire	Litz 5X3/27/44
Inductance	16.65uH
Turns	Tpri = 3
Wire Length	7.1 + 8.0 = 15.1 inches
DC resistance	2.414 mOhms
AC-DC resistance ratio	1.375
AC resistance	3.318 mOhms

Capacitor Selection

- Primary loss mechanism is ESR
  - ESR impacts thermal stability from self-heating
- Capacitance shift (stability)
  - Temperature drift
  - Voltage, dielectric stress
- Both are related to dielectric material
  - X7R
  - **NP0/C0G**

Capacitance of Ceramic Capacitors at 10%, 50% and 100% of Rated Voltage (DC), "Typical".

Dielectric:	C0G	X7R	Z5U
%C at 10%:	100%	105%	120%
%C at 50%:	100%	95%	50%
%C at 100%	100%	70%	30%

Capacitor, ESR

- ESR is related to
  - Operating frequency
  - Reactance
- Specified in terms of:
  - Dissipation Factor (DF)
  - Tanδ
  - Q-Factor
- Common DF values
  - X7R ➔ 1.0%
  - NP0 ➔ 0.1%

$$DF = \tan\delta = \frac{ESR}{|X_C|}$$

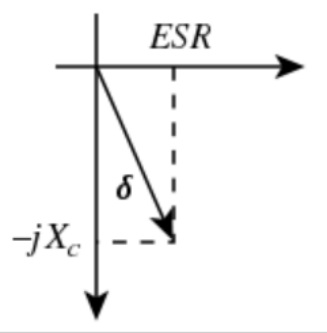

$$ESR = DF \cdot |X_C| = \frac{DF}{2 \cdot \pi \cdot f_{sw} \cdot C}$$

$$Q = \frac{1}{DF} = \frac{1}{\tan\delta} = \frac{|X_C|}{ESR}$$

Capacitor, Losses

- Total Capacitance needed is ~6500pF (~7nF)
- Total Reactance
- Total ESR

Capacitance	Total Capacitors Required	Total Reactance (X_C in Ω)	ESR (Ω)
220pF	30	51.1 Ω	51 mΩ
470pF	14	51.2 Ω	51 mΩ
1000pF	7	48.1 Ω	48 mΩ

- Power loss per Capacitor

Capacitance	220pF	470pF	1000pF
ESR	1.53 Ω	0.72Ω	0.34 Ω
Current	0.333 A	0.714 A	1.43 A
Power	0.170 W	0.364 W	0.729W

- Must have parallel caps to improve thermal stability

Power Device, Selection

- Devices need to provide low losses at 500kHz is a challenge
- Switching Losses: ZVS or ZCS reduces switching losses leaving conduction
- Conduction Losses: Modern MOSFETs achieve ultra low Rds_on
- Vishay Si7840DP has 15mOhm typical, and low switching transition time

The Loss Model

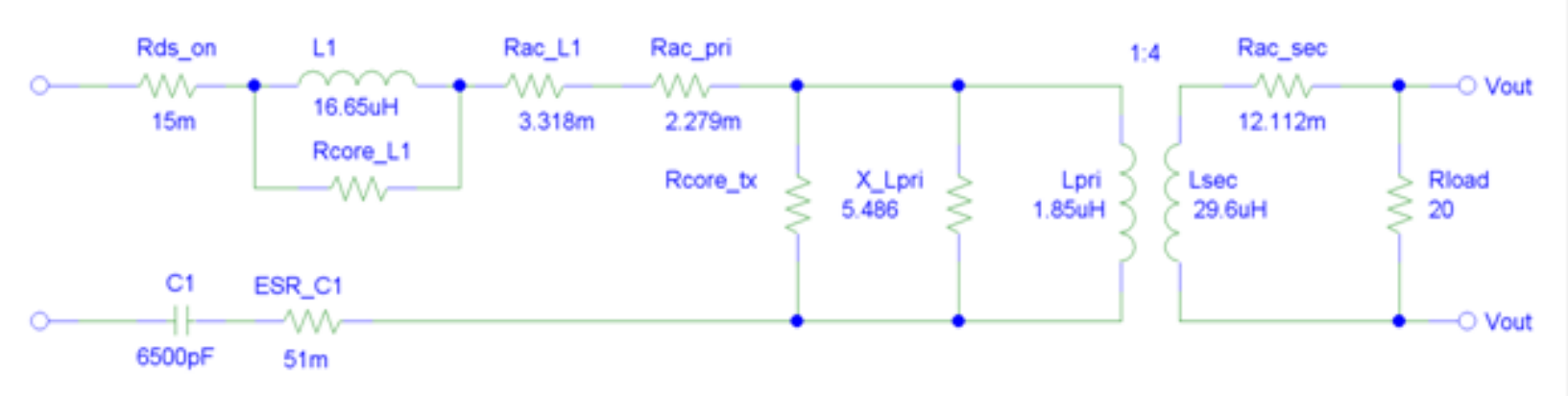

- Includes the parasitics
  - Trace losses
  - Power devices
  - Inductor AC resistance and core loss
  - Transformer AC resistance and core loss
  - Capacitor ESR

Revised Loss Model

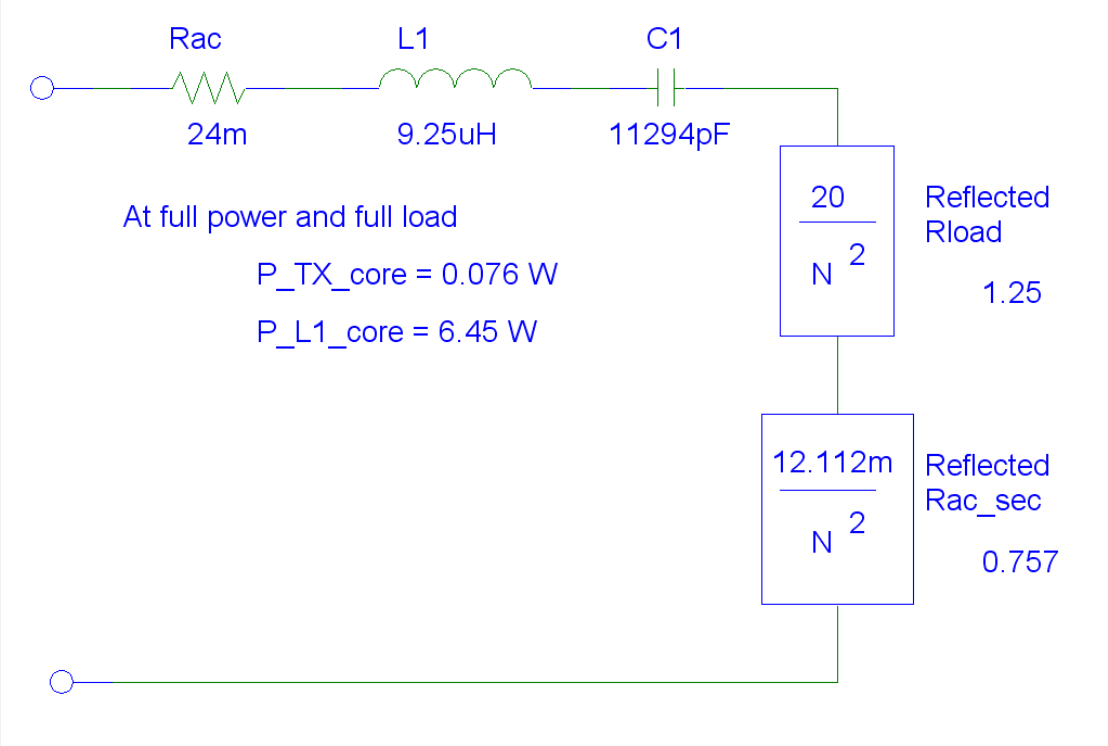

- Estimated Design Efficiency ~ 83.5%

$\eta_{RF} = 92.794 \quad \%$

$\eta_{DC} := 90 \quad \%$

$\eta_{total} = \eta_{RF} \cdot \eta_{DC}$

$\eta_{total} = 83.515 \ \%$

First Round of Testing

- Proved topology was capable of generating a low distortion sinewave output

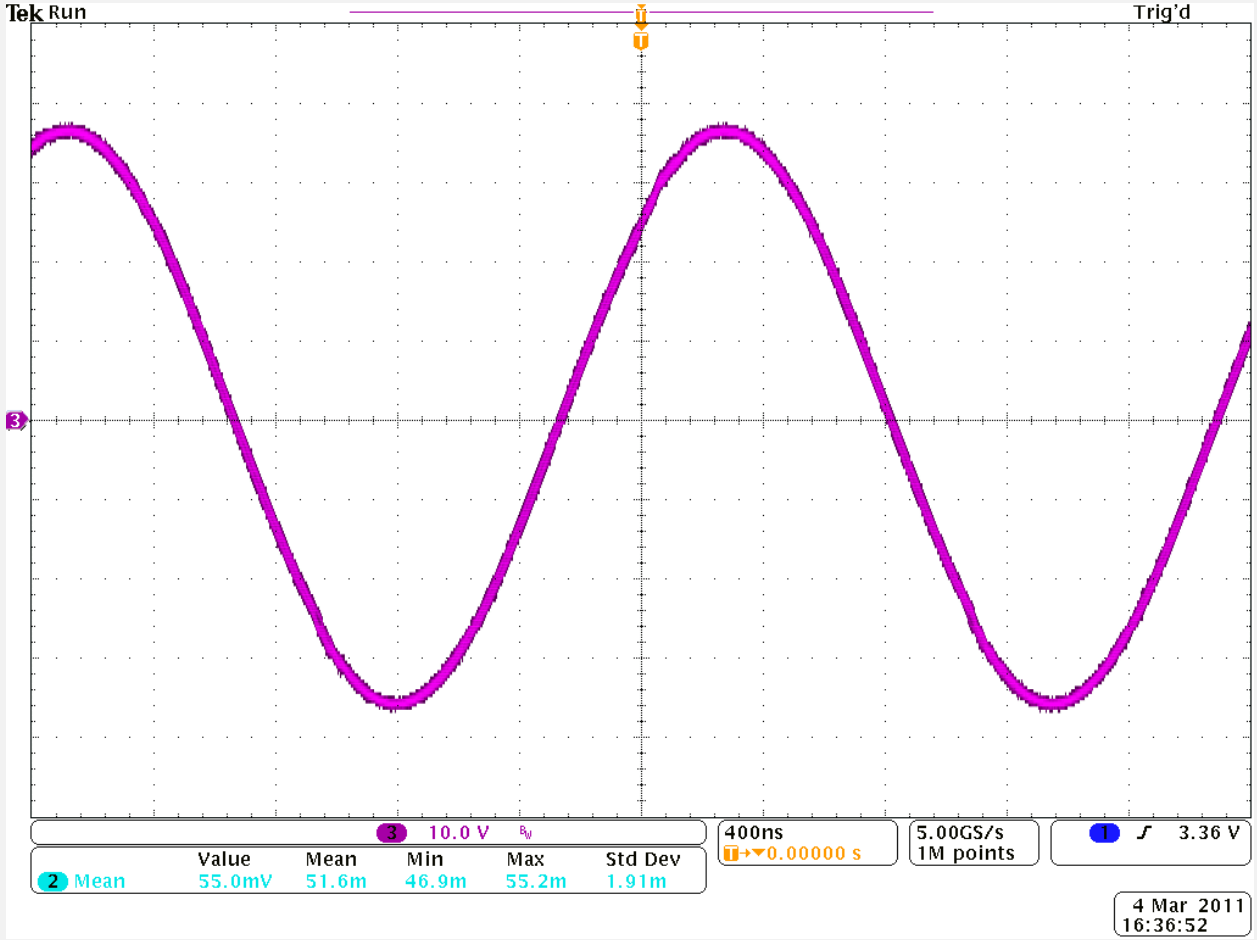

First Round of Testing

- Initial testing of the first design did not meet the intended RF output power (max Po ~ 62 Watts)

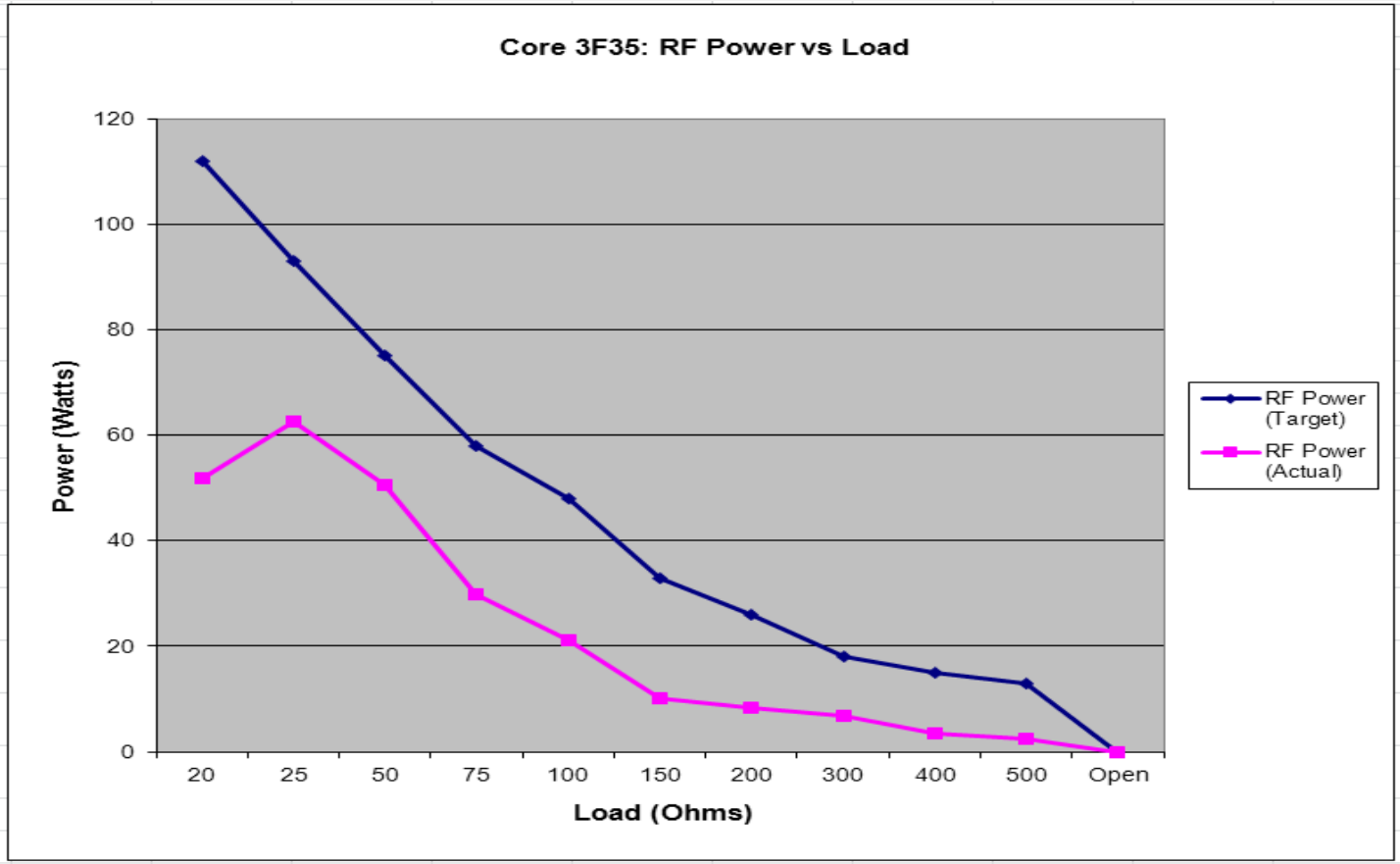

- **Core losses are higher than expected**

Design Improvements

- Improve core losses in the transformer by adding a small gap of (0.1mm)
- Change transformer turns ratio from 4 to 3 to allow 2-turns on the primary to increase the reactance from the magnetization inductance to improve load matching

Primary Turns	2
Primary Inductance	1.8 uH
Secondary Turns	6
Secondary Inductance	8.12 uH
Turns Ratio	3
Core Gap	0.1 mm

- Change the series inductor to an air core type
  - Using Wheeler Equation

$$L = \frac{0.8 \cdot r^2 \cdot N^2}{6r + 9l + 10d}$$

All in inches
r = coil mean radius
l = coil length
d = depth of coil (OD - ID)
N = number of turns

Inductance	5.6 uH
Outer Diameter	31.75 mm
Inner Diameter	12.70 mm
Overall Length	38.10 mm
Turns per Layer	9
Layers	3

Resonant Amplifier Final Design

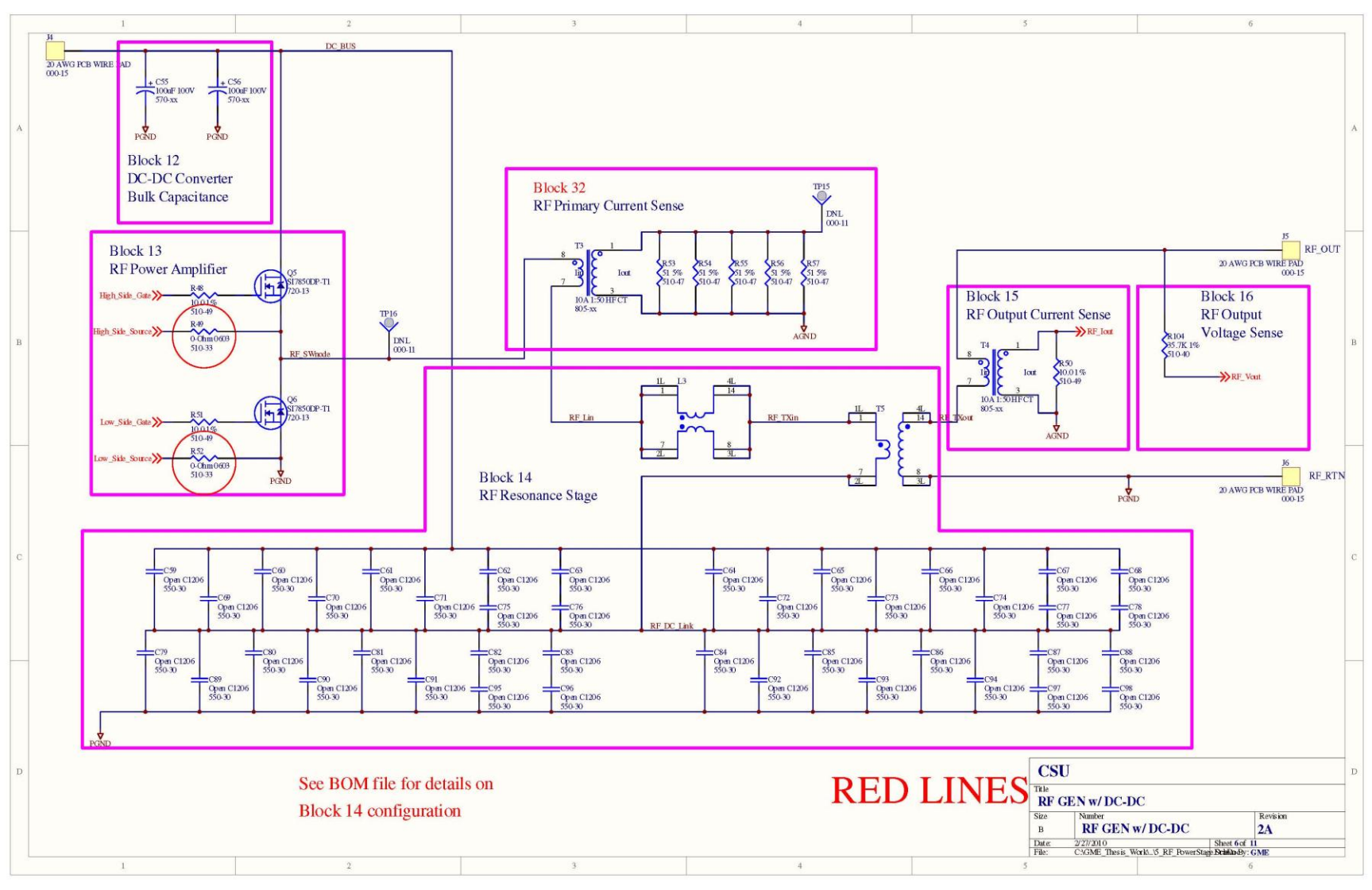

The RF Gen Board

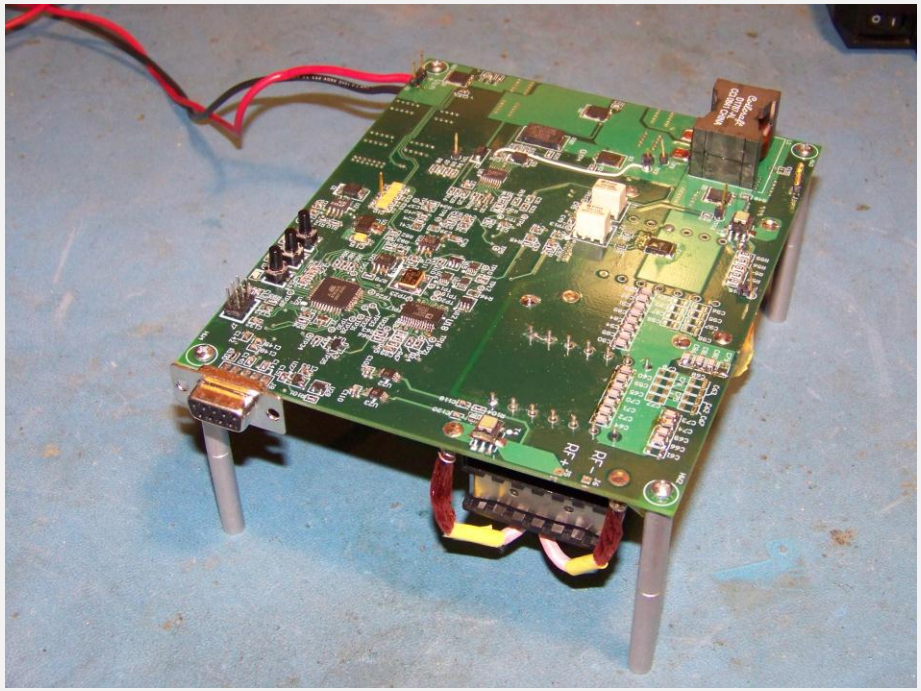

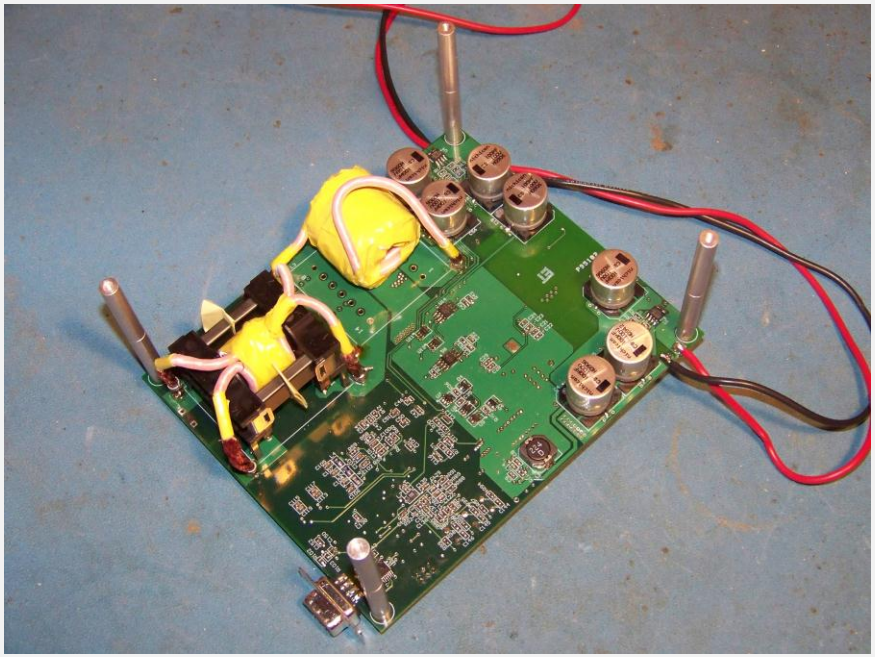

Enclosure

- For safety the RF Gen board was mounted in a enclosure and a fan added to ensure cooling until all testing could be completed
- Front

- Back

DC-DC Buck Stage Testing

- The output voltage of the DC-DC Buck is variable to control the RF output amplitude
- The efficiency is a function of the output voltage

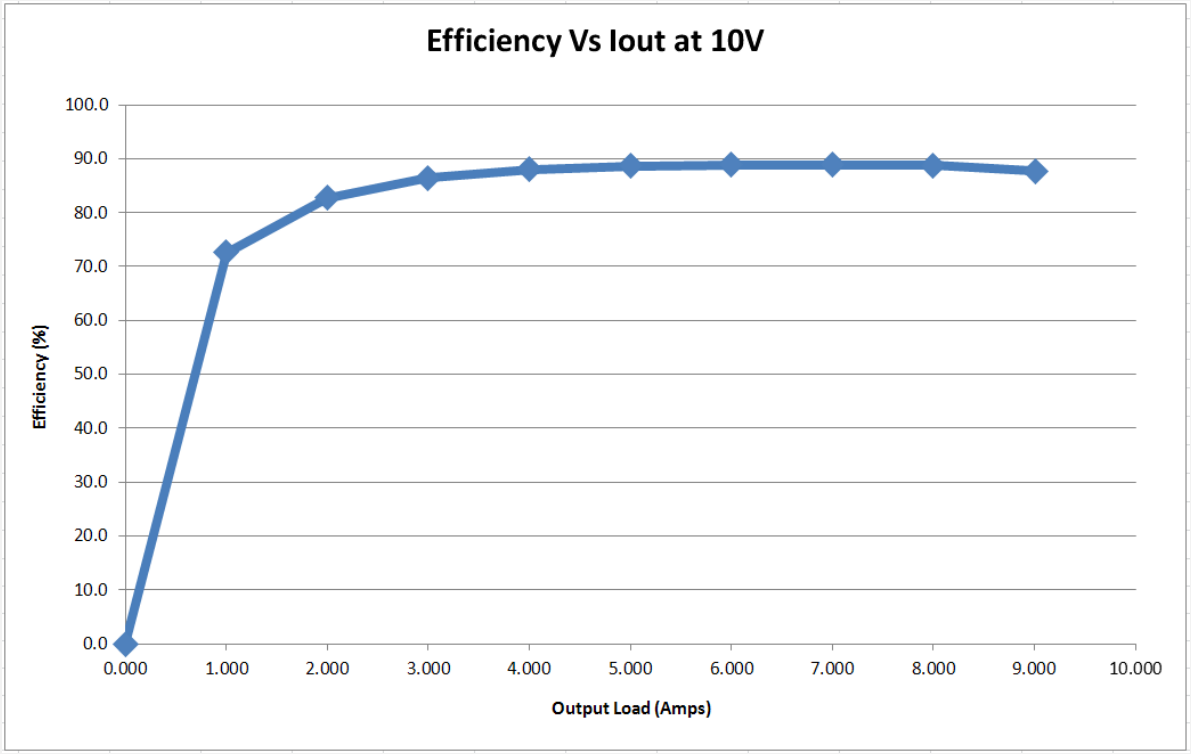

- At 10V, full power the efficiency ~ 87%

- At 35V full power the efficiency ~95%

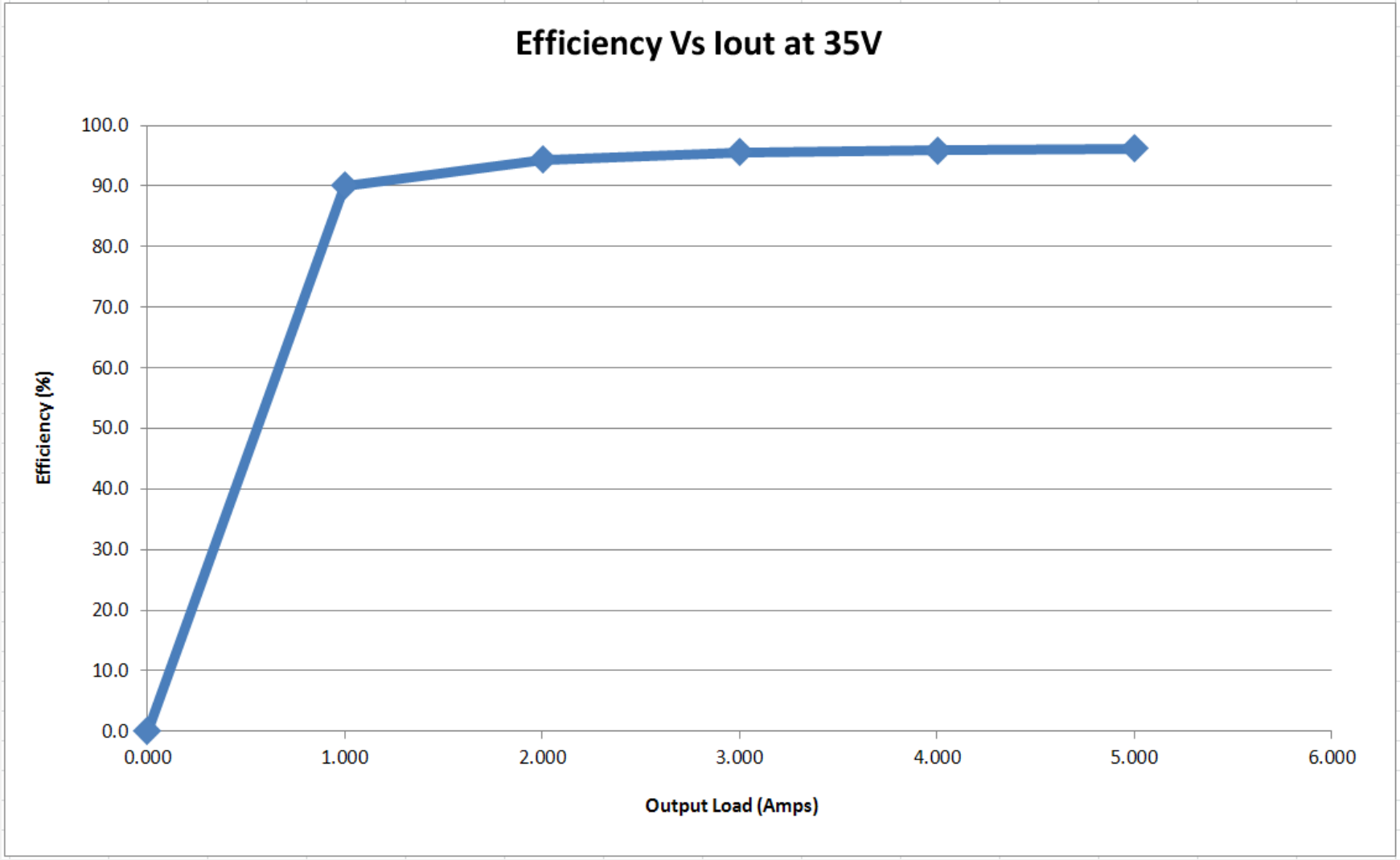

Overall Efficiency of Improved Design

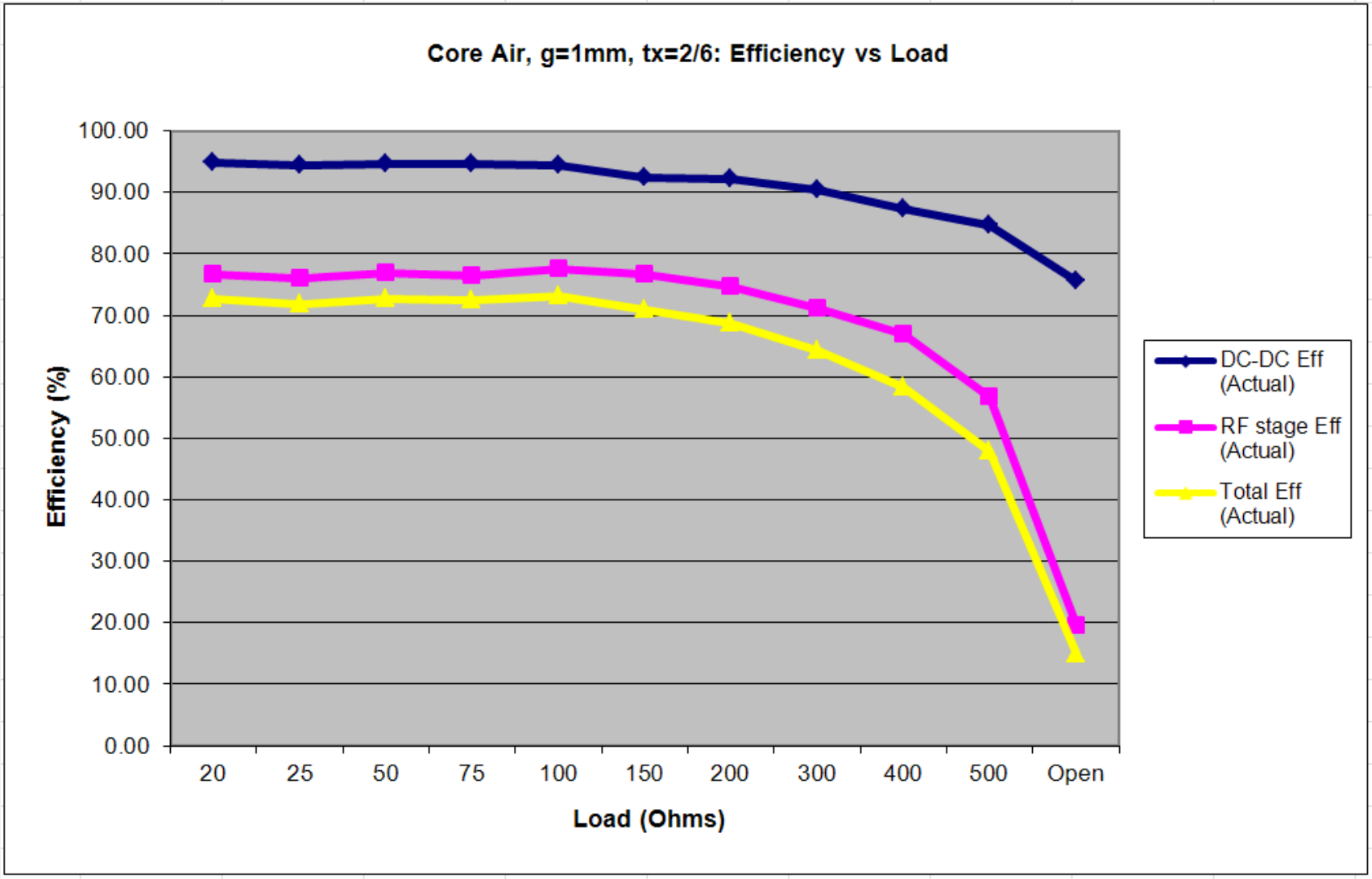

RF Output Power

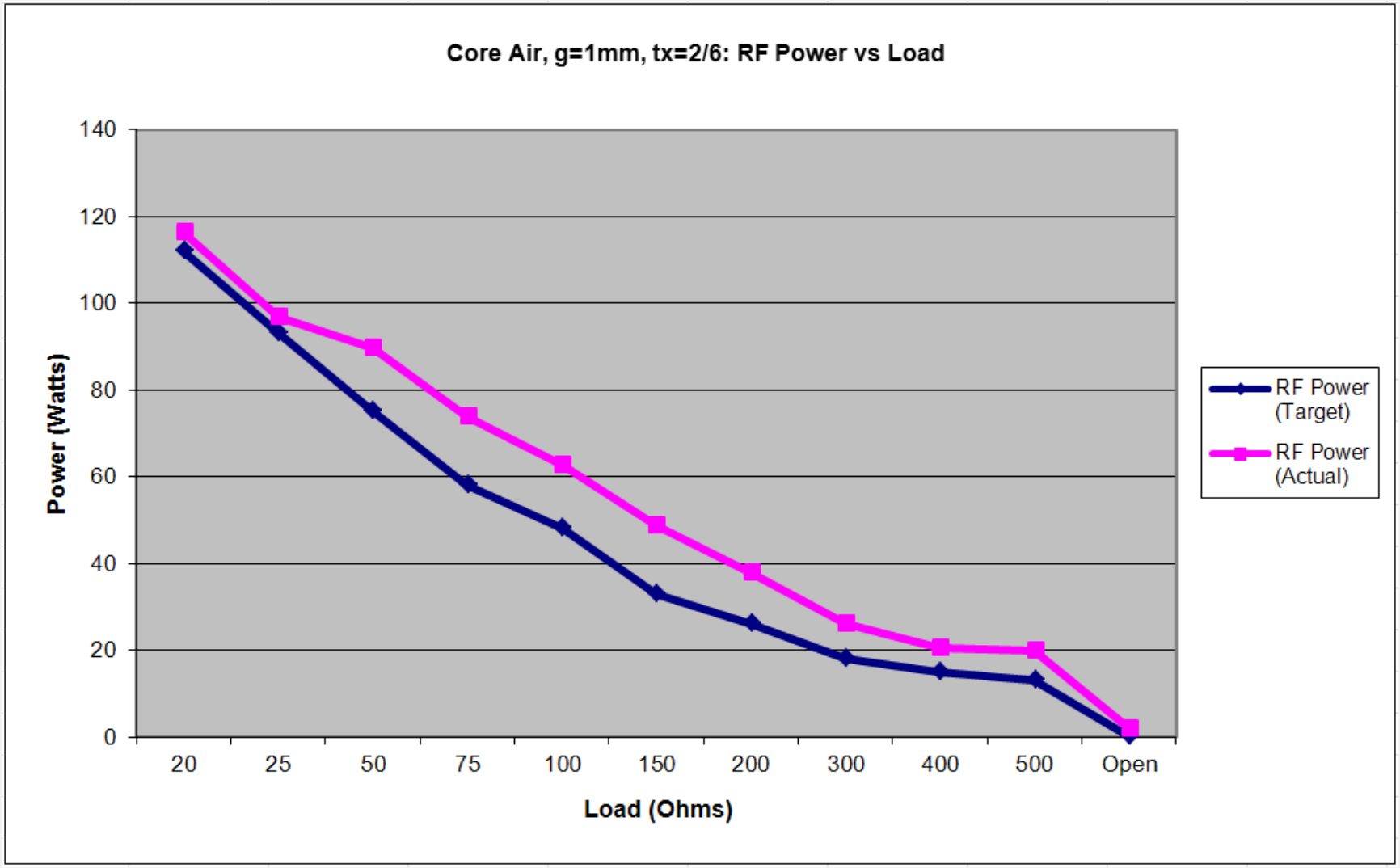

RF Output Voltage Limit

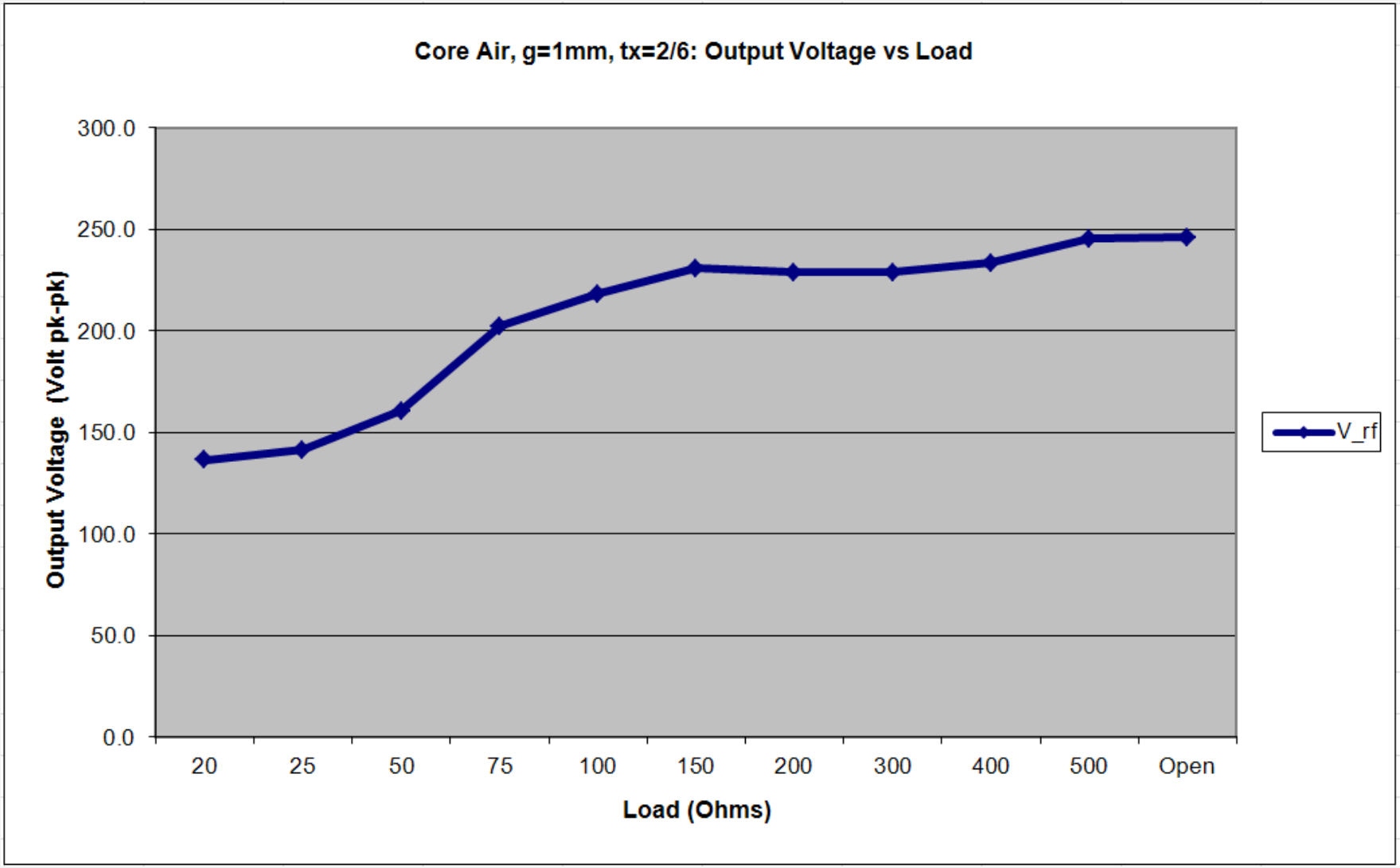

Summary of Target Design

Parameter	Target	Actual Bench Test
Input Voltage Range	42 to 60 Vdc	42 to 55 Vdc
Output Frequency at 50 Ohm	472kHz	473kHz
Frequency Variation	±23kHz (ΔF = 46kHz)	+20kHz –42kHz (ΔF = 62kHz)
Max output power	112 Watts at 20 Ohms	116 Watts at 20 Ohms
Output power derating	13 Watts at 500 Ohms	19.8 Watts at 500 Ohms
Output Load Impedance	20 to 500 Ohms	20 to 500 Ohms
Max output voltage at no load	250 Volts peak to peak	246 Volts peak to peak
Efficiency	>80% at full power	72.7% at 116 Watts
Package size	77mm x 102mm x 51mm (Volume 400 cm^3)	127mm x 152.4mm x 63.5mm (Volume 1229.0 cm^3)

CSU RF Output High Voltage

- HV Transformer Design was based on other magnetics
  - High output voltage 1000 VRMS
  - High turns ratio 15

Core material	Ferroxcube 3F35
Form factor	Ferroxcube ETD34/17/11
Insulating Tape (between layers)	3M 1205 Tape
Turns Ratio	15
Primary Turns	4
Primary Wire	4 parallel strands of 24AWG ESSEX H Ultrashield Plus
Primary Inductance	3.6 uH
Secondary Turns	60
Secondary Wire	1 strand of 24AWG ESSEX H Ultrashield Plus
Secondary Inductance	1665 uH
Core Gap	0.1 mm

CSU RF Output High Voltage, Results Gas Plasma

- Conditions Prior to Skin Penetration

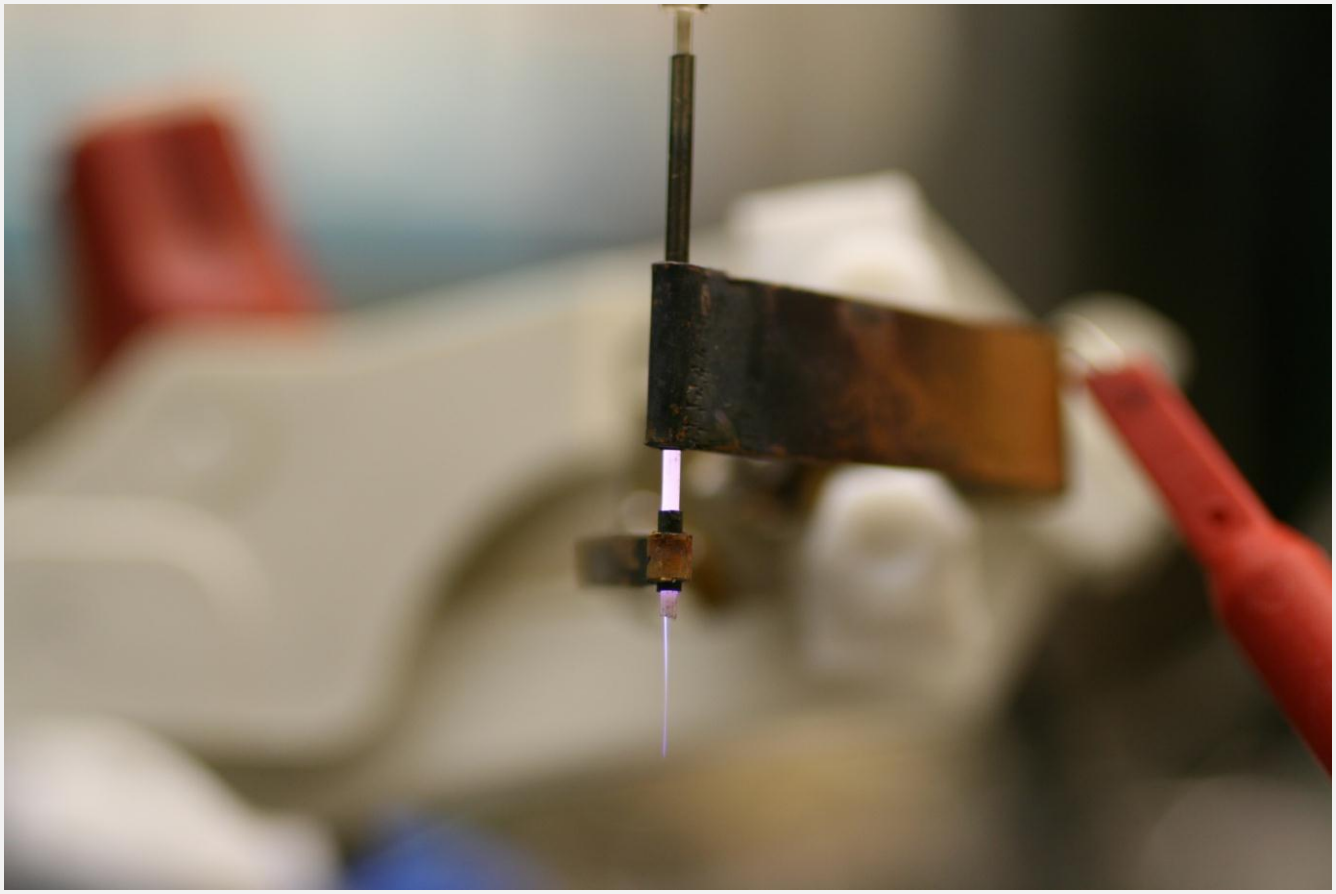

CSU RF Output High Voltage, Results Liquid Plasma

- Conditions Inner body using Saline Solution

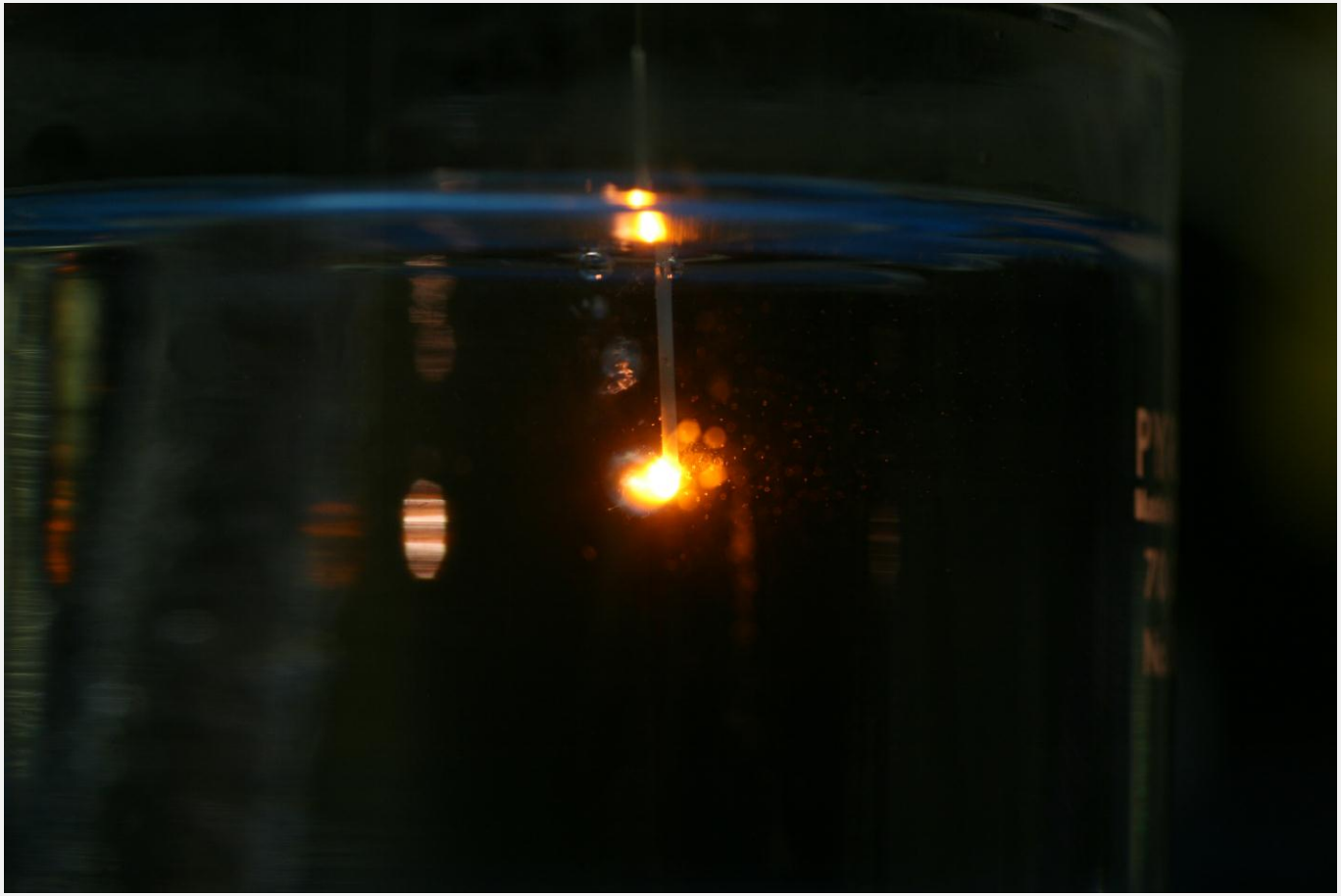

Future Work

- Add Switch Phase Detection for improved frequency tuning response and impedance control
- Redesign the RF stage for high voltage plasma version (Liquid and Gas) *(Hong Yao, CSU MS project, current)*
- Consider load dynamic RF matching in output stage for plasma for improved stability and efficiency *(Craig Power, CSU MS project, current)*
- Redesign the power supply section for reduced size *(Closely related work, Mike Schover, CSU MS project, current)*
  - 110Vac input
  - Battery

Switch Phase Detection

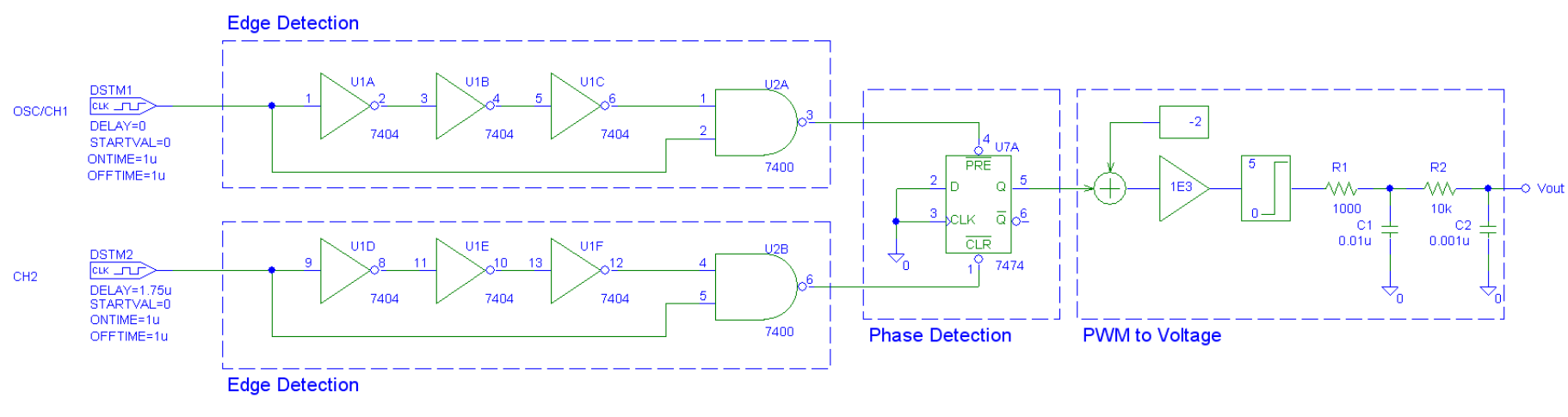

- Compares the switch voltage and switch current
- Outputs a voltage that represents the phase difference
- Using the Analog to Digital Converter (ADC) the software can adjust the frequency

- Based on simulations the concept could work

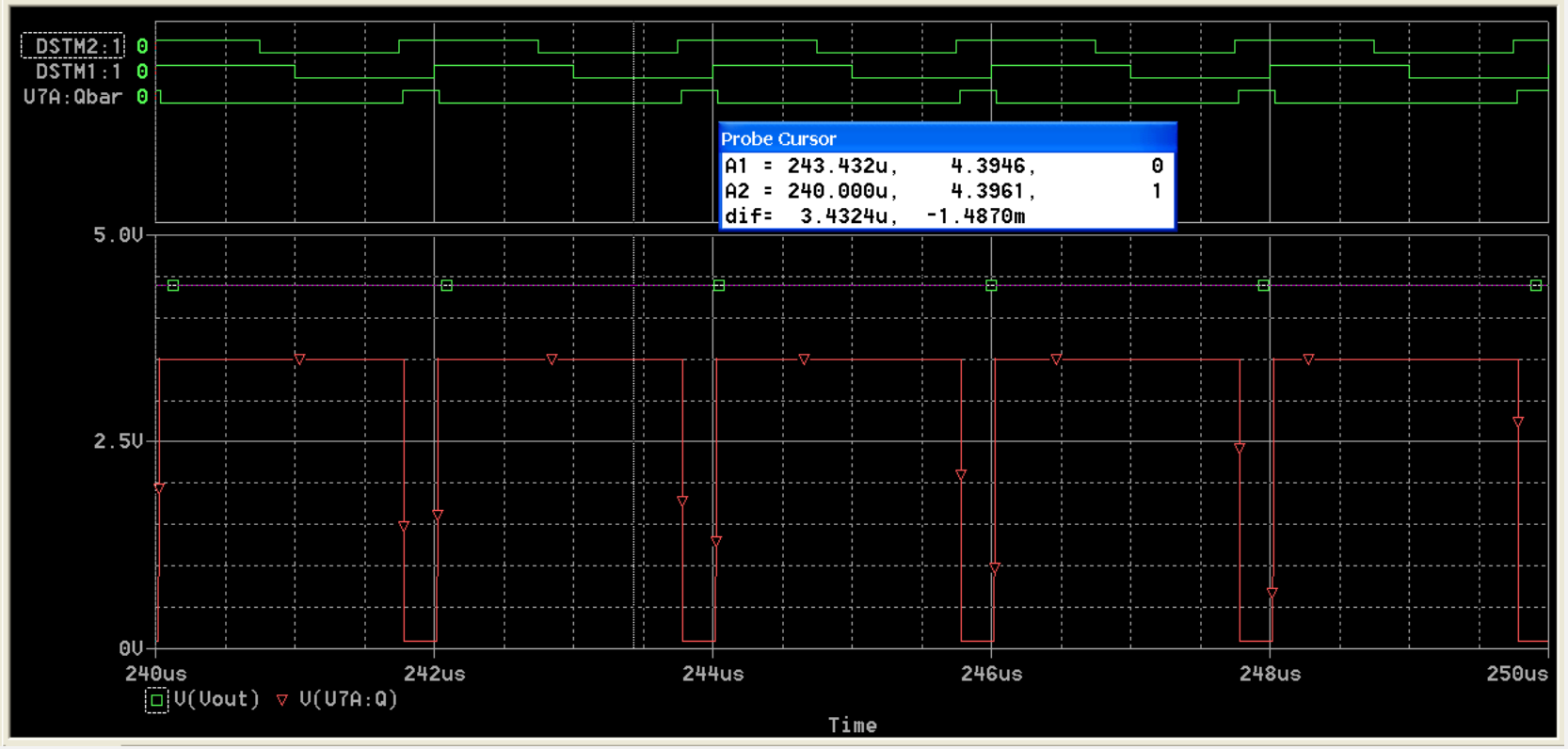

Phase Delay === Vout
0.00u ======== 0.108
0.25u ======== 0.645
0.50u ======== 1.272
0.75u ======== 1.895
1.00u ======== 2.522
1.25u ======== 3.145
1.50u ======== 3.768
1.75u ======== 4.395
1.95u ======== 4.895

Plasma Version

- Design a version that is self-contained with ability of drive a plasma load directly (1-2 kV RMS)
- Eliminate the requirement of external High Voltage transformer
- Increase PCB spacing to meet the HV requirement
- Change the output current sense to have the proper isolation level (~3kV)

Dynamic Matching

- Use phase detection IC to sense phase shifts of output voltage and output current
- Adjust impedance matching network
- Load matching to achieve output maximum power transfer.

Redesign Input Power

- Eliminate the requirement of a external 48V power source.
- This will simplify the system to one box.
- Change the buck power source to a off-line topology

- For portable use in the field (emergency response services)
- Design the input source to be compatible with a battery

Acknowledgments

- Dr. Collins
  - Guidance, support, and motivation
- Covidien
  - Craig, Mark and Covidien for financial support
- Committee members (Dr. Chen, Dr. Sakurai, Dr. Siegel)
  - Support and flexibility allowing this final exam
- Dr. Koo, Sam Choi, Hong Yao
  - Assistance in testing, editing and proofing
- My Family
  - My wife and daughter for their patience and support

Questions?