The Jacobian can be expressed in an arbitrary frame, such as the base frame located at the first joint, the hand frame located at the end-effector, or the global frame located somewhere else.

The SVD has long been a valuable tool for quantifying various dexterity measures: manipulability (product of the singular values), isotropy (ratio of the maximum singular value to the minimum) and proximity to singularities (minimum singular value).

(1) Prove: no matter what frame the Jacobian is expressed in, the value of the above dexterity measures based on the singular values will not change.
(2) Give the physical explanation of the fact in (1).

Given $U, V, \dot{\boldsymbol{x}}$ and $\dot{\boldsymbol{\theta}}$ perform the following steps:

a) Find the rotation angle, $\varphi$, by which $\boldsymbol{u_1}$ is rotated in relation to $\dot{\boldsymbol{x}}_{\mathbf{1}}$
b) Solve for $\sigma_i$ , $i = 1, \dots, \min(m, n)$
c) Determine the condition number, $k$, for the matrix $D$ from the SVD process
d) Solve for the Jacobian, $J$, using the following two equations and show that they produce the same matrix:

$$J = UDV^T \qquad\qquad J = \sum_{i=1}^{\min(m,n)} \sigma_i \hat{u}_i \hat{v}_i^T$$

e) Solve for the pseudo-inverse Jacobian, $J^+$, using the following two equations and show that they produce the same matrix:

$$J^+ = J^*(JJ^*)^{-1} \qquad\qquad J^+ = \sum_{i=1}^{\min(m,n)} \frac{1}{\sigma_i} \hat{v}_i \hat{u}_i^T$$

$$U = \frac{1}{2889}\begin{bmatrix} 1292 & -2584 \\ 2584 & 1292 \end{bmatrix} \qquad V = \frac{1}{3}\begin{bmatrix} 2 & 1 & -2 \\ 1 & 2 & 2 \\ 2 & -2 & 1 \end{bmatrix} \qquad \dot{\boldsymbol{x}} = \begin{bmatrix} 1 \\ 1 \end{bmatrix} \qquad \dot{\boldsymbol{\theta}} = \begin{bmatrix} .825 \\ -.34 \\ 1.01 \end{bmatrix}$$

Q. Assume a two joint manipulator; the first joint being prismatic and the second one rotary

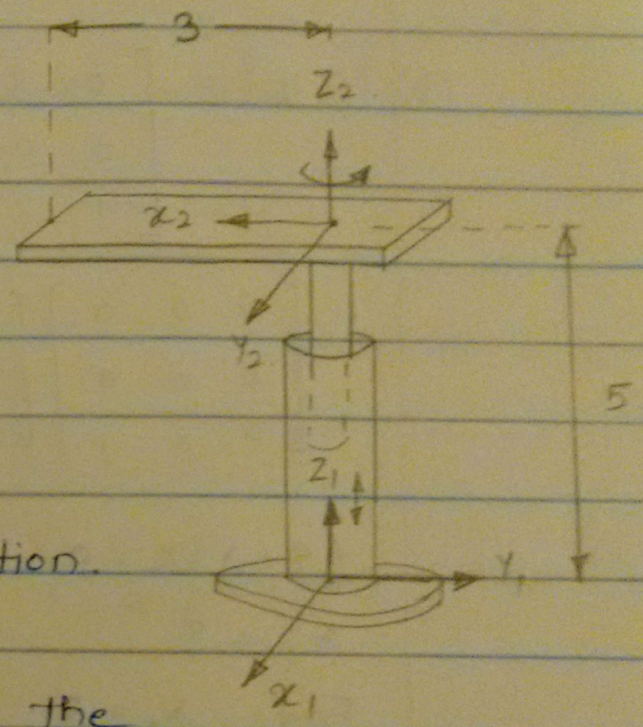


(a) Give the 3x2 jacobian $J_1$ in the present configuration.

(b) Perform singular value decomposition and give the U, S, and V matrices. Do NOT use MATLAB According to the U and V matrices calculated, draw the unit vectors of U and V in the tool space and joint space respectively.

(c) Calculate the condition number K. Also calculate $K_{des}$ (assume $\lambda = 50$). Use formulae (9) and (20) from article 2.

Consider a planer robot manipulator with 2 links(two rotary joints), the link length are $l_1$=3m, $l_2$=$2\sqrt{2}$m, and the angular values are $\theta_1$, $\theta_2$. The Jacobian matrix is given below:

$$\begin{bmatrix} 2 & 2 \\ 1 & -2 \end{bmatrix}$$

(1) Please compute $\theta_1$ and $\theta_2$, and draw the robot manipulator.

(2) Please compute the singular value and the condition number k.

(3) Compute the rotation angle $\varphi$ as shown below and draw an ellipse which describes the velocity.

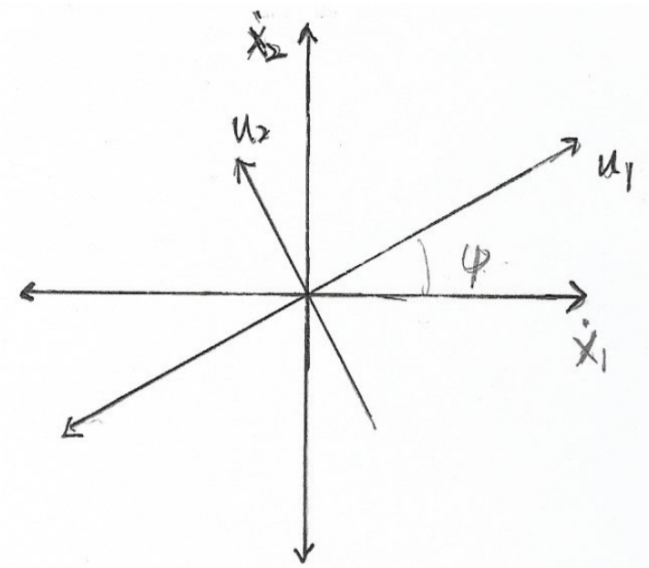

Suppose the configuration is just like the figure shows, with all links' length equal to 1m, take $X_0$, $Y_0$ and $Z_0$ as the base coordinate, and all the angle velocity is limited less or equal to 0.5 *r/s*. If we need to use damped least-squares solution to give the command.

1. Please determining an appropriate damping factor ( $\lambda$ ) to meet all these constraints.
2. Under this situation what is the condition number ($\kappa$) equals to?

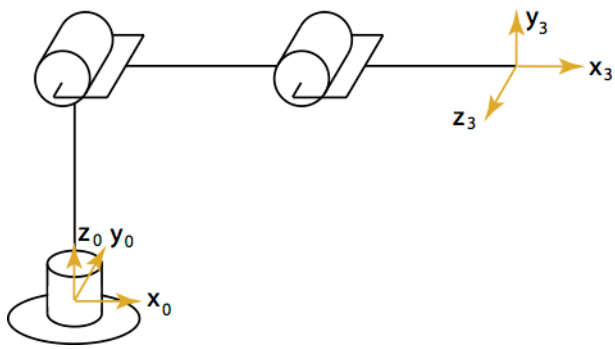

Find the Singular Value Decomposition of the Matrix (all the solving procedures are needed):

$A = \begin{bmatrix} 5 & 5 \\ -1 & 7 \end{bmatrix}$

Hint: $A = UDV^T \rightarrow A^TA = UD^TDV^T$

$AV = UD$

1. The singular values of A are the square roots of the eigenvalues of $A^TA$
2. To set up V you have to find the eigenvectors of $A^TA$
3. If the V or U vector that you obtain here is not orthogonal, use the Gram-Schmidt to orthogonalize it

A 3DOF planar robot as below:

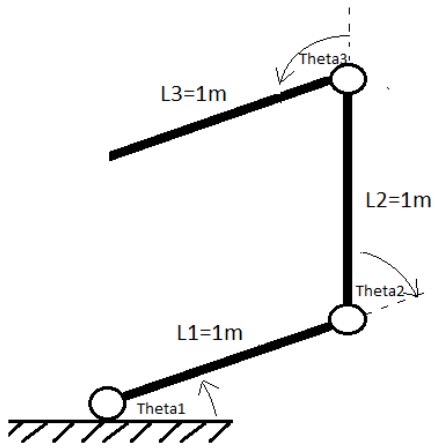


Has a Jacobian $J^0 = \begin{bmatrix} -1 & 0.5 & 0.5 \\ 0 & 0.866 & -0.866 \end{bmatrix}$ where $J^0 = U\,D\,V^T$

$U = \begin{bmatrix} 1 & 0 \\ 0 & 1 \end{bmatrix}$ $\quad D = \begin{bmatrix} 1.2447 & 0 & 0 \\ 0 & 1.2447 & 0 \end{bmatrix}$ $\quad V^T = \begin{bmatrix} -0.866 & 0 & 0.577 \\ 0.408 & 0.707 & 0.577 \\ 0.408 & -0.707 & 0.577 \end{bmatrix}$

a. Find $\sigma_{min}$ and $\sigma_{max}$? And what does it mean if they are equal?

b. Plot, as vectors, the effect of all joints at tooltip?

c. Find the null vector for this configuration?

d. Give one configuration (Thetas) that result $\sigma_{min} = 0$ for the above robot? And, what does it mean if $\sigma_{min} = 0$?

# HomeWork Problem #2.

Consider a three link planar robot as shown in the figure below.

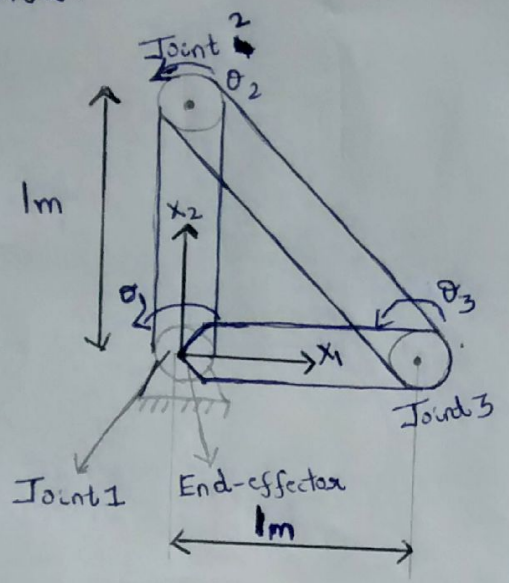


Hint: The tip of the end-effector exactly coincides with the centre of joint 1 as shown in the figure.

A) Write the Jacobian for robot configuration shown above. Write the Jacobian with respect to the $X_1 X_2$ frame attached to joint 1 as shown in the diagram

B) Write the Singular Value Decomposition (SVD) of the Jacobian that you computed for the above robot configuration. HINT: Use svd() function in MATLAB.

C)

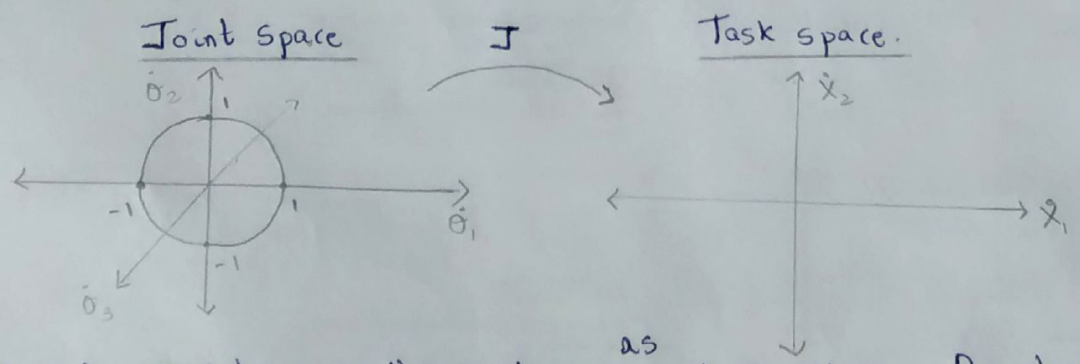


Consider a sphere on the joint space as shown above. By observing the Singular Value decomposition, draw the mapping of this sphere onto the task space for this particular configuration. HINT: Use the SVD that you computed in part (B) of this question.

D) By observing the mapping on the task space, which you drew in part C, comment on the directions in which end-effector can move easily.
(OR) what are directions in which the end-effector can move easily.

Given $\dot{X} = \begin{bmatrix} 1 \\ 2 \end{bmatrix}$ and $\mathrm{J}_{2*3} = \begin{bmatrix} 1 & 2 & 3 \\ 2 & 5 & 2 \end{bmatrix}$. Determine $\dot{\theta}$ by pseudo inverse Jacobian (a) without damping factor; with damping factor λ=(b)0.1 (c)10.

A 2-dimensional robotic manipulator is shown in the figure. Please calculate the joint velocities when we need a Vtip=(4,0) by using (a) $\dot{\theta} = J^{+}\dot{x}$ ; (b) $\dot{\theta} = J^{T}(JJ^{T} + \lambda^{2}I)^{-1}\dot{x}$ with λ =1; (c) $\dot{\theta} = J^{T}(JJ^{T} + \lambda^{2}I)^{-1}\dot{x}$ How does λ affect the result?

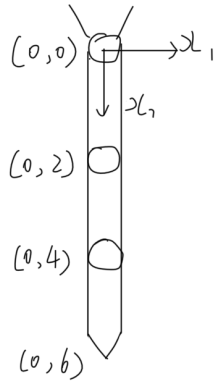

1. Can one determine just by examining a jacobian, whether a robotic arm is in a singular configuration? If yes, suggest any two methods.

2. Damping coefficient in the damped least squares solution determines the damping needed when transitioning between singular and non-singular configurations. What is the effect of increasing damping coefficient to very high value?

3. You are given the task of designing a robot for minimal invasive surgery. Its application is in surgery where patients are operated upon by doctors using robotic arms. The given task requires a non-redundant robotic arm. You are required to calculate the damping coefficient for use in the inverse kinematics algorithm. Determine the best method applicable in this situation and calculate the optimum damping coefficient.

   Specifications:

   Maximum allowed tracking error = 0.1 mm
   Maximum allowed joint angle velocity = 25 rad/sec
   Maximum condition number = 5

   Singular values of the robotic arm for the worst physical configuration:

$$58.05 > 5.53 > 3.01 > 2.4855 > 0.6355 > 0.1$$

Q. What is singularity in context of a robot manipulator? What is its effect on the Degrees of freedom of the robot?
Define degenerate direction.
Explain the wrist singularity for PUMA robot and write the conditions when it occurs along with the figure.

**PUMA**

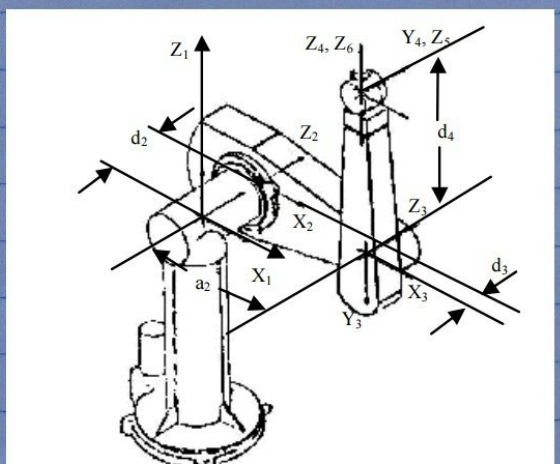

For the manipulator shown below, find the joint velocities that yield end-effector velocity $\dot{x}_d = [0.5 \;\; 0.0]^T$ m/s if the arm posture is defined by $q = [0.25\text{m} \;\; \pi/2 \text{ rad} \;\; 0\text{rad}]^T$. Use DLS method. Assume damping factor of 0.1. Denote proper units in the solution. Use MATLAB if necessary.

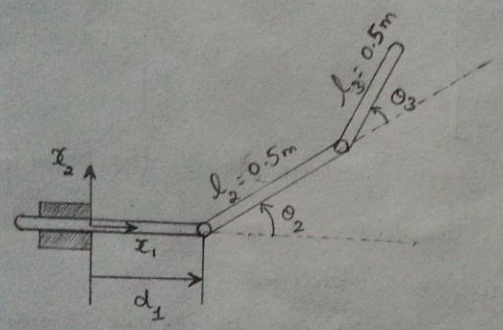

# Week 2 - Assignment - 2

1] Find the relationship between angular and linear velocities between two frames as shown below (In terms of matrices), Hence the relation bet^n Jacobians.

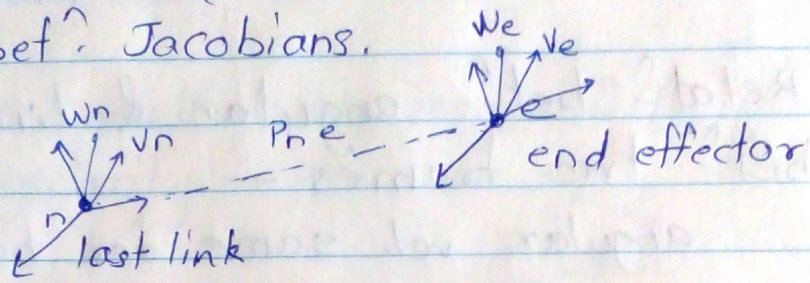


2] What is kinematic Redundancy?
For the following Robot, determine whether it is Redundant or not?

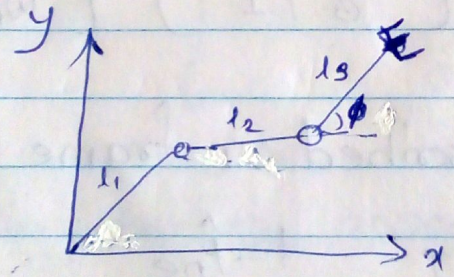


What if we don't consider effect of $\phi$?

Question:

Draw a figure to compare the Pseudoinverse and Damped Least Square with singular value ( $\sigma$ ) and Norm of Joint Velocity. Explain the difference between two solutions when closing to the singularity.

Consider the arm shown in the figure. find the condition number for the given orientation of the arm & also J'. $\theta_1 = 37^\circ$ $\theta_2 = 323^\circ$, $\theta_3 = 90^\circ$.

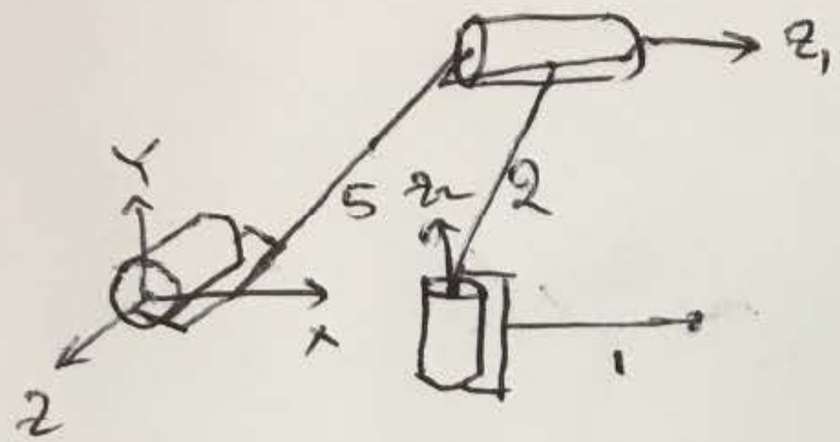

Given a 3 joint planar manipulator with a jacobian

$$J = \begin{bmatrix} -0.6736 & -0.5 & 0 \\ 2.85 & 1.866 & 1 \end{bmatrix} = USV = \begin{bmatrix} -0.2217 & 0.9751 \\ 0.9751 & 0.2217 \end{bmatrix} \begin{bmatrix} 3.6405 & 0 & 0 \\ 0 & 0.2350 & 0 \end{bmatrix} \begin{bmatrix} 0.8044 & -0.1067 & -0.5844 \\ 0.5303 & -0.3146 & 0.7873 \\ 0.2679 & 0.9432 & 0.1964 \end{bmatrix}$$

Q. 1: ..... 1 point

What part of the SVD indicates when the configuration is nearing or in a singular configuration? Is the jacobian in or near a singular configuration?

Q. 2: ..... 1 point

Assuming the condition number of the jacobian is equal to the maximum condition number of the pseudoinverse, what damping factor should be used?

Find the SVD of the following matrix A: U, D,and $V^{\mathrm{T}}$

$$A = \begin{bmatrix} 3 & 2 & 1 \\ -1 & 3 & 1 \end{bmatrix} \tag{1}$$