Accepted to appear in IEEE Access, 2017

A Holistic Approach to Transforming Undergraduate Electrical Engineering Education

Anthony A. Maciejewski, *Fellow, IEEE,* Thomas W. Chen, Zinta S. Byrne, Michael A. de Miranda, Laura B. Sample McMeeking, Branislav M. Notaros, *Fellow, IEEE,* Ali Pezeshki, *Member, IEEE,* Sourajeet Roy, *Member, IEEE,* Andrea M. Leland, *Member, IEEE,* Melissa D. Reese, Alma H. Rosales, Thomas J. Siller, Richard F. Toftness, *Lifetime Member, IEEE,* Olivera Notaros

***Abstract*—Our diverse team of educators at Colorado State University are redefining what it means to teach and learn in the Department of Electrical and Computer Engineering. Supported by a five-year "RED" grant from the National Science Foundation, we are, in effect, throwing away courses to overcome the challenges of the current engineering educational system. Approaching the degree from a holistic perspective, we no longer view our program as a set of disparate courses taught by autonomous (and isolated) faculty, but as an integrated system that fosters collaboration among faculty and students. This manuscript describes our new organizational and pedagogical model, which emphasizes knowledge integration and interweaves thematic content threads throughout the curriculum. We also share our process for implementing the new approach, along with the successes and challenges that we have experienced along the way. Through this project, we strive to become a catalyst for change in engineering education.**

***Index Terms*—circuits and systems, engineering education, electrical engineering education, electronics, engineering students, electromagnetics, globalization, linear systems, STEM.**

I. INTRODUCTION: THE NEED FOR REFORM IN ELECTRICAL AND COMPUTER ENGINEERING EDUCATION

A. Background

The current engineering educational system is failing students, alumni, and society in two fundamentally important ways. First, students with the desire and aptitude to become productive engineers are not seeing the relevance of current curricula, and, consequently, they are abandoning the discipline. This is especially true for electrical and computer engineering (ECE) students entering the middle two years of the core undergraduate program, where an accelerated number of new concepts are introduced. Second, students who ultimately graduate from undergraduate engineering programs may not fully understand the role of an engineer or the scope of the field [1]. These problems are even more pronounced for women and minorities who are still vastly underrepresented in the profession.

Underscoring these failings, the seminal book, *The Engineer of 2020: Visions of Engineering in the New Century* [2], hit the shelves in the mid-2000s and turned the nation's attention to the critical issues facing engineering education. The authors of the book called for "thoughtful and concerted action if engineering in the United States is to retain its vibrancy and strength." The follow-on book, *Educating the Engineer of 2020: Adapting Engineering Education to the New Century* [3], offered recommendations for broadening engineering education so graduates are better prepared to work in a constantly changing global economy. Resulting from a multi-year study of educational practices at U.S. engineering schools, *Educating Engineers: Designing for the Future of the Field* [4] also spelled out an opportunity for faculty to become more responsive to the needs of the profession.

For the past decade, engineering educators have been working to carry out the visions of engineering in the new century, drawing on best practices, research findings, and lessons learned. However, we are still grappling to perfect the recipe for ensuring students are prepared for the grand challenges [5] of the profession. Two things we know to be true: 1) the themes and messages of these books are still critically important today, and 2) in order to attract and retain students in engineering, we must do a better job of making educational experiences more meaningful and relevant in the context of a global economy.

B. ECE education through our lens: Enrollment and retention

Our decision to rethink engineering education did not happen overnight. To give context for our motivations, we provide a snapshot of the ECE department at Colorado State University (CSU), an environment with enrollment and retention trends that mirror the national picture.

This paper was submitted for review on March 29, 2017.

This work was supported by the National Science Foundation, IUSE/Professional Formation of Engineers: Revolutionizing Engineering Departments (RED) under Grant EEC-1519438.

A. A. Maciejewski, T. W. Chen, B. M. Notaros, A. Pezeshki, S. Roy, A. M. Leland, M. D. Reese, and O. Notaros are with the Department of Electrical and Computer Engineering, Colorado State University, Fort Collins, CO 80523 USA (e-mails: {aam | thomas.chen | branislav.notaros | olivera.notaros | ali.pezeshki | sourajeet.roy | andrea.leland | melissa.reese}@colostate.edu).

Z. S. Byrne is with the Department of Psychology, Colorado State University, Fort Collins, CO 80523 USA (e-mail: Zinta.Byrne@colostate.edu).

M. A. de Miranda is with the Department of Teaching, Learning, and Culture, Texas A & M University, College Station, TX 77843 USA (e-mail: demiranda@tamu.edu).

L. B. Sample McMeeking is with the School of Education, STEM Center, Colorado State University, Fort Collins, CO 80523 USA (e-mail: Laura.Sample_McMeeking@colostate.edu).

A. H. Rosales is a Consultant with Professional Skills Development, Fort Collins, CO 80523 USA(email: arosales@engr.colostate.edu).

T. J. Siller is with the Department of Civil and Environmental Engineering, Colorado State University, Fort Collins, CO 80523 USA (e-mail: thomas.siller@colostate.edu).

R. F. Toftness is with Tasterra Consulting, Loveland, CO 80537 USA (e-mail: rtoftness@gmail.com).

Historically, it was not uncommon for impressionable first-year students across the country to receive a cautionary message from their engineering professors: Look to your left, look to your right only one of you will graduate. Nationwide retention rates in engineering have been exceptionally low for decades [6], and the same challenges persist today. With six-year graduation rates hovering around 35% year after year [7], our department is no exception. Currently home to 26 full-time faculty, 433 undergraduates, and 212 graduate students, we represent a small portion of the 33,200 students at CSU. Our high achieving students, whether straight from high school or transferring from a two-year institution, enter the program with exceptional academic records. We are like many ECE departments in the U.S. in that male students make up 85% of our undergraduate population. As the state's land-grant institution, most of our undergraduates are Colorado residents, and we attract an impressive share of first-generation students those who do not have a parent who has attained a bachelor's degree [8]. Adding further complexity to our retention efforts, statistics show that first-generation students are retained at lower rates even when adjusting for socioeconomic factors [8].

There are undoubtedly a wide variety of causes for the attrition trend in ECE education, such as the need for stronger social support systems and a lack of preparation for the demands of the program [9]-[12]. However, we believe the crux of the problem lies in the failings of the traditional course-centric structure wherein faculty function independently without demonstrating the connections between fundamental topics throughout the ECE curriculum. Much like the systems engineering process, students need to master individual topics in order to solve real-world problems, but they must also have a big picture understanding of how core concepts fit together to form the basis of engineering innovation. When difficult-to-grasp subjects continue to be taught in isolation, or silos, using the same rigid curricular structure and lecture-style learning environment, students are not able to see the relationships between topics, nor the societal relevance of their new knowledge. It is no surprise that retention remains a serious concern. The problem is exacerbated for ECE students because a holistic understanding is highly dependent on their grasp of key foundational concepts in mathematics and science, which are traditionally taught outside the ECE department, leaving it up to the students to understand, and make linkages between, ECE topics and foundational content. To add further challenges, many faculty members recognize the failings of the current system and see the value in transformational change, but they are not incentivized to act because the deeply embedded assessment process emphasizes student and faculty performance in individual courses, rather than measuring students' mastery of core competencies and overall understanding.

These issues are particularly acute in ECE because it is perceived as inherently more abstract than its partner discipline, mechanical engineering, where enrollments are soaring. Twenty-five years ago, EE enrollments far outpaced mechanical engineering, but the tides turned a decade ago. After dipping around The Great Recession, ECE enrollments are rebounding at a steady pace, as shown in Fig. 1. Meanwhile,

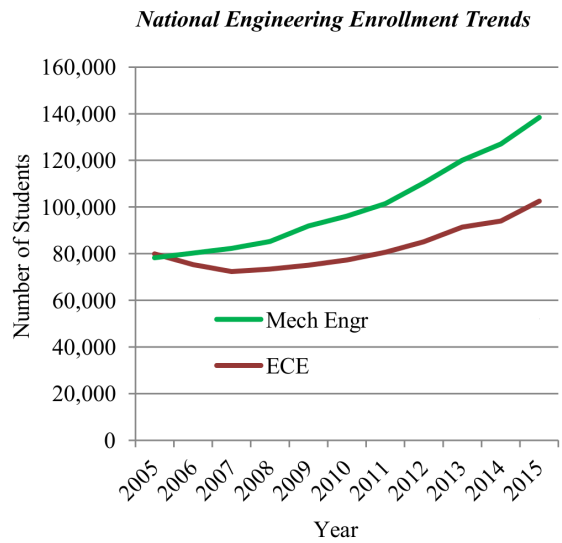

Fig. 1: Enrollments: ECE vs Mechanical Engineering

mechanical engineering enrollments have surpassed ECE and continue to grow. With nearly 1,100 mechanical engineering undergraduates at CSU compared to less than 450 in ECE this trend holds true at our institution and has triggered a first-ever cap on mechanical engineering admissions.

Academic leaders involved with the ECE Department Heads Association (ECEDHA) are working to unravel this problem and change perceptions about electrical and computer engineering. As part of its initiative, "The Strategic Shaping of ECE," ECEDHA's goal is to synthesize and articulate a collective vision of an exciting and attractive future for ECE for the next 50 years that is highly relevant and important to scientific, technological, and societal progress [13].

C. Related work

Previous attempts to improve undergraduate engineering education have been largely course- or project-based efforts. Successful first-year course reforms range from one-credit, voluntary introduction to engineering courses, e.g., at the University of Florida [14], to fully integrated first-year block curricula, such as Drexels E4 program [15], the IMPULSE program at Massachusetts-Dartmouth [16], the Engage program at Tennessee [17], and the NSF-sponsored Engineering Education Coalition program [18]. Many ECE programs have adopted separate courses/modules that include more hands-on projects for freshmen to enhance their learning experience.

An additional theme in pedagogical interventions is that of knowledge integration. An idea that is central to our project, knowledge integration has a long history in engineering education with a growing body of literature touting the positive impacts to retention and learning [4][19]-[27]. From concurrent scheduling of related courses to elicit "integration by chance" [21] to Rose Hulman's concept of super courses [24], a wide range of prototypes have been implemented to facilitate knowledge integration. In the early 1990s, Bordogna et al. [19] advocated for a paradigm shift in engineering education

to a more holistic approach to learning. Our team shares the authors' concerns about curricula taught in "unconnected pieces." In 2005, Heywood published a synthesis of nearly 2,000 articles focused on making engineers better educators [23]. Providing a comprehensive overview of attempts to integrate topics in engineering curricula, his book considers the correlations and similarities between subjects being integrated. He also discusses the popularity of problem-based learning, the most commonly used pedagogical approach to enable knowledge integration.

Olin College of Engineering serves as a success story of a true integrated academic experience [25]. Guided by the philosophy that "engineering starts and ends with people," [25] Olin faculty work together across disciplines to engage students in projects connected to real-world challenges. While inspiring wide interest and recognition in the engineering community, a limitation of Olin's approach is that it can be challenging to imitate within the structural barriers of a typical public university. Borrowing from the mainstays of Olin's innovative philosophy, we believe our vision is unique because it can be realized and sustained within the constraints of most organizational structures in higher education.

D. Time for a change

We know that to fundamentally change misconceptions about electrical and computer engineering and reverse the alarming trend of losing students interests in the discipline while carrying out the visions of engineering in the 21st century a radically new approach to teaching and learning is needed. We believe it is on us, as educators, to help students connect the dots between topics and understand why they are learning material. Our ultimate goal is to show students the relevance of their knowledge, how it relates to the world outside their classroom, and how it will help them shape the future. The remainder of this paper describes our efforts to achieve this goal and transform the educational landscape in the Department of Electrical and Computer Engineering at Colorado State University. Section II provides an overview of our approach and the components of our pedagogical and organizational changes. Section III explains how we are implementing the new approach, along with specific examples of how we are interweaving and integrating content to help students connect the dots between topics and see how their knowledge relates to the profession and society as a whole. Section IV outlines our strategy for testing the efficacy of our teaching and learning model. Section V shares early successes and challenges of our work (hint: it has not been easy). Finally, section VI offers early conclusions and plans for sharing our project with the engineering community.

II. REVOLUTIONIZING ENGINEERING AND COMPUTER SCIENCE DEPARTMENTS ("RED"): A HOLISTIC APPROACH TO TEACHING AND LEARNING

A. Motivation and vision

Motivated by our desire to overcome the existing challenges in engineering education and make the learning experience more meaningful and relevant for students, our diverse team of educators at Colorado State University are redefining what it means to teach and learn in the ECE department, along with the processes and value systems through which people become engineers. In 2015, we received a five-year "RED" grant from the National Science Foundation [28] to perform research that leads to scalable and sustainable change in engineering and computer science education for the nation. As part of the RED initiative, we are paving the way to change through organizational and pedagogical innovations that incentivize and empower our faculty to work in teams to deliver integrated content. Even though our educational model represents a new direction for engineering pedagogy, it is not a controversial idea [19]. Our vision is novel because it can exist within and provides a solution to the failures associated with the traditional course structure inherent in higher education. Our work looks at the undergraduate engineering degree as a complex system, enabling a holistic view of the discipline that gives consideration to the interconnectivity and integration of fundamental components across courses. To further engage students, we are moving beyond the typical lecture- and lab-based delivery modes and assessments to develop a culture that embraces active learning and student collaboration. With ABET's accreditation criteria in mind, the new model allows us to evaluate and improve our efforts through fine-grained assessments based on learning outcomes and student mastery of content.

B. New organizational structure reimagines faculty roles and weaves threads throughout the curriculum

Moving from the traditional course-centric structure to a teaching and learning environment where faculty collaboration is essential for success, our new organizational structure reimagines the roles of the faculty. Instead of teaching courses in silos, multifaceted faculty teams are working collaboratively to show how concepts connect across topics and to professional practice, without compromising students' depth and breadth of knowledge known as "T-shaped skills."

As shown in Fig. 2, key faculty members have been assigned new roles as "thread champions" and "integration specialists" to interweave foundations, creativity, and professionalism threads throughout the curriculum and deliver fully integrated content. Their efforts span the entire undergraduate experience, with special attention to the critical technical core of the middle two years. Serving as an incentive to elicit participation in the cultural shift, evaluations and annual raises have been adjusted to measure faculty performance in these new roles:

- *Integration specialists* work with fellow faculty to synthesize content and identify touch points for knowledge integration, taking the form of horizontal threads that illustrate how fundamental concepts are interrelated.
- *Thread champions* are held accountable to a systems way of thinking and are evaluated on their ability to innovatively establish new tools and assessments to vertically weave knowledge threads throughout the curriculum.

Many central concepts and skills impact a student's ability to become a well-rounded engineer, and these subjects must

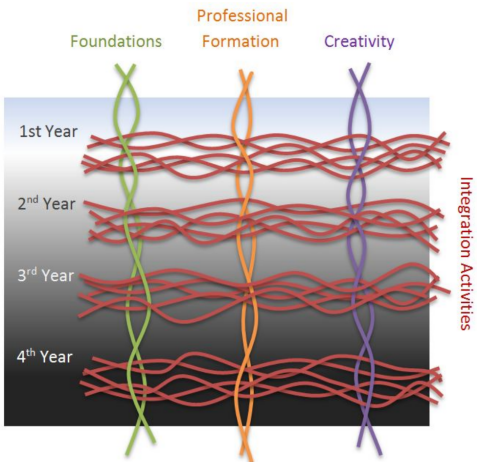

Fig. 2: CSU's new organizational structure in which faculty roles are expanded to include responsibilities as integration specialists and thread champions

permeate the curriculum instead of being taught in individual courses:

- *Foundations thread (math and science)* Key mathematical concepts lay the foundation for understanding the anchoring concepts in courses throughout the ECE curriculum. The foundations thread unpacks mathematics and physics concepts to help students learn fundamentals in ECE topics like circuits, signals and systems, and electromagnetics. The foundations thread champion spearheads the collaboration between the math and ECE departments to introduce and promote the value and utility of mathematics in ECE courses, as well as the importance of mathematical thinking.
- *Creativity thread (research, design, and optimization tools)* The creativity thread is intended to integrate research and design throughout the undergraduate experience. By showing the impact of research, students will see the practical applications and potential breakthroughs of fundamental ECE concepts. Likewise, exposing students to design at every level of the undergraduate experience allows them to experience the excitement of engineering by applying their foundational knowledge to a tangible product.
- *Professional formation thread (communications, cultural adaptability, ethics, leadership, and teamwork)* Partnering with faculty and industry leaders to ensure students develop professional skills meaningfully and effectively, a former IBM executive spearheads the professional formation thread, which is designed to demonstrate the importance of professional skills in the workplace and enhance student-industry interactions. Rather than saving professional skills development for the senior year, this thread reinforces professionalism at multiple points throughout the curriculum.

C. Pedagogical changes emphasize knowledge integration

As described in our papers, "Weaving Professionalism Throughout the Engineering Curriculum [29]," and "Mastering the Core Competencies of Electrical Engineering through Knowledge Integration [1]," our new organizational structure is accompanied by a pedagogical model that builds on the concept of "nanocourses" [30][31], and emphasizes knowledge integration, a learning model grounded in education pedagogy and supported by research [32].

In the pre-RED pedagogical structure, technical courses in the middle two years represented significant challenges to students enrolled in the ECE program. The amount of content covered increased significantly over time, and many students found it difficult to grasp the concepts because they are extremely abstract and mathematically intense. Moreover, students were not seeing the connections between technical courses and how the material fits into the big picture, causing them to lose confidence and motivation. Combining rigor and flexibility to improve student understanding and efficacy, our faculty are working in teams to dissect, rearrange, and synchronize fundamental course concepts into cohesive Learning Studio Modules (LSMs) that culminate in knowledge integration (KI) activities. While area-specific learning modules have been in existence for years, such modules are usually supplements to the core curriculum and do not typically cover fundamental subjects vital to comprehending abstract topics, nor do they stitch together anchoring concepts to lay the groundwork for real-world applications. By properly aligning LSMs from different core competency areas, a set of KI activities are created to illustrate how the topics fit together to solve real-world engineering problems [29].

D. Importance of instructional innovation and student engagement

Another aim of the RED project is to revolutionize our instructional methods and assessments. We know that the lecture-style format does not go far enough to capture students' interest and show the relevance of content to the real world. To help us innovate in the classroom and implement active learning methods and assessments that more directly involve students in the learning process, we paired our faculty with instructional designers at The Institute for Teaching and Learning (TILT) an on-campus resource that provides direct support to faculty to enhance learning, teaching, and student success. We are also making available to students the latest tools and technology to bring their ideas to life, including ARM processors and USB-powered multifunction instruments, which turn any PC into a powerful design laboratory environment to build and test circuits. Such advancements are transformational because they make hands-on learning available 24/7.

III. THROWING AWAY COURSES: IMPLEMENTING ORGANIZATIONAL AND PEDAGOGICAL INNOVATIONS

A. Learning studio modules lay foundation for knowledge integration activities

Still in the early stage of our five-year project, we are currently launching phase one of the new organizational and pedagogical approach and the cultural shift is already in progress. Multifaceted faculty teams, led by thread champions

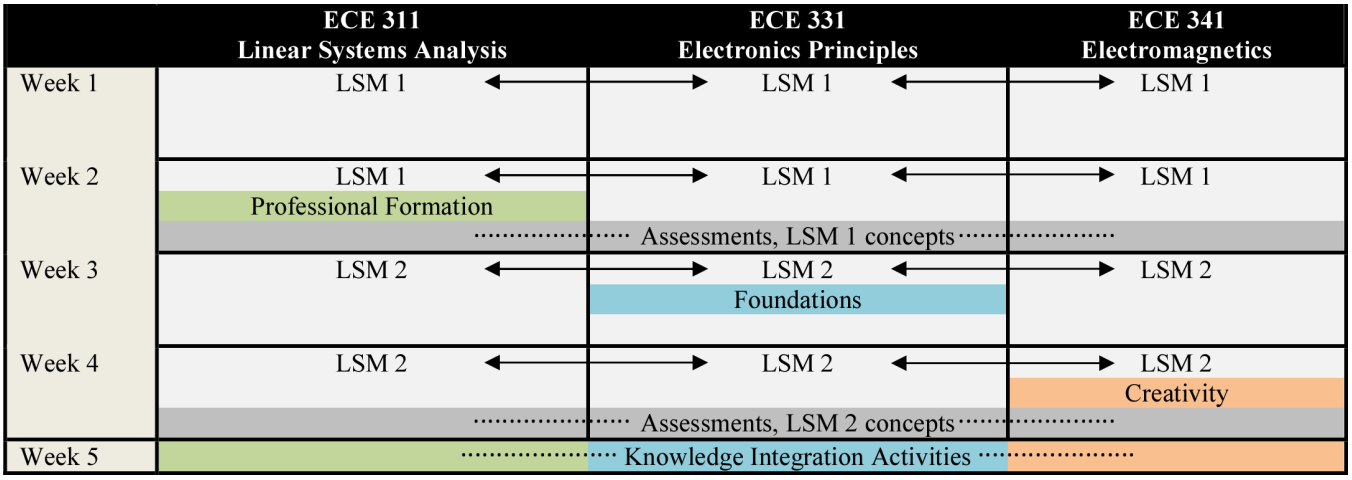

Fig. 3: Snapsnot of new pedagogical model for a portion of the technical core

and integration specialists, worked together to break apart seven ECE courses in the technical core of the junior year to create the first set of learning studio modules (LSMs). Each LSM is self-contained and addresses one anchoring concept and a set of sub-topics in a given core competency area [1]. Although a departure from the traditional course structure, LSMs still provide a path for students to learn all the intended topics in a rigorous fashion.

To begin, the faculty team selected five anchoring concepts for each of the seven technical core courses, and then rearranged and synchronized the topics into 35 LSMs. When the team compared anchoring concepts of the traditional junior-level course sequence, they were able to see how topics connect across the curriculum and where the knowledge integration could occur. Instead of viewing each course in isolation, this process prompted each faculty member to think about the curriculum from a holistic perspective [29]. Considering prerequisite material and correlations between topics, the faculty then determined the optimal ordering of content, and verified that all anchoring concepts are covered without undesirable overlap. Once the LSMs were established, integration specialists helped determine the timing of knowledge integration activities. While LSMs represent multiple modules across a given semester, knowledge integration activities occur less frequently but go a step further to make overall learning more coherent.

B. A closer look at new pedagogical model

Providing a snapshot of the new pedagogical model, Fig. 3 illustrates how content from what were three core courses in the first semester of the junior year electronic principles, linear systems analysis, and electromagnetics are rearranged and synthesized into LSMs across multiple weeks, setting the stage for a week of knowledge integration activities. In addition to working with the thread champions to devise a strategy for weaving foundations (shown in blue), professional formation (shown in green), and creativity (shown in orange) throughout the LSMs and the KI activities, instructors of the core courses collaborated to align topics and discuss how each LSM would be taught using common terminology, notations, and shared examples. Fig. 3 highlights the micro-integration that occurs between the LSMs, illustrated using the horizontal arrows, to show cross-correlations among anchoring concepts and subtopics in the technical core. Providing a framework for implementing new active learning methods, competency-based evaluations are conducted upon completion of each set of LSMs to evaluate student mastery of fundamental concepts. In the fifth week, the six fundamental concepts introduced in the first four weeks are integrated into a team-based design experience, thus incorporating the three vertical threads as well.

To provide an example of the range of topics covered throughout the technical core, Table I shows the fundamental anchoring concepts in each LSM for the fall semester of the junior year.

Each of these LSM anchoring concepts is subdivided further into finer grain subtopics to ensure depth, breadth, and alignment of content across the LSMs. As an example, Table II shows the subtopics within LSM 2 for what used to be the three required junior-level courses. Note that the timing of the discussion of linearity in the linear signals/systems module aligns with the discussion of the non-linear I-V characteristics of a diode, and its subsequent piece-wise linear approximation. This reinforces the utility of these fundamental signals/systems concepts for electronic design, and vice versa.

C. Implementing active learning and formative assessments into the LSMs

In addition to laying the foundation for knowledge integration, the new pedagogical structure allows faculty to implement teaching and learning approaches that more directly engage students. As an example, one of our faculty members has developed a set of 888 concept-level questions to help students comprehend anchoring concepts in electromagnetics [33]. In preparation for each LSM, students must complete assigned pre-work that includes required reading and a timed, online evaluation that asks a series of concept-level questions pertaining to topics in the pre-assigned text [34]. These brief,

TABLE I: Anchoring concepts of LSMs for the first semester of the technical core

	ECE311 Linear Systems Analysis	ECE331 Electronics Principles	ECE341 Electromagnetics
	Anchoring Concepts		
LSM 1	Transient and complex exponential signals	Fundamental semiconductor physics	Electrostatic field in free space
LSM 2	Linear time-invariant systems	Diodes, diode models, and applications	Electrostatic field materials media
LSM 3	Spectrum analysis of continuous-time signals	Large signal analysis for BJTs and FETs	Steady electric currents
LSM 4	Spectrum analysis of discrete-time signals	Small signal analysis for BJTs and FETs	Magnetostatic field
LSM 5	Frequency response of LTI systems and sampling	OPAMP networks	Low-frequency electromagnetic field

TABLE II: Example of subtopics in LSM 2

	ECE311 Linear Systems Analysis	ECE331 Electronics Principles	ECE341 Electromagnetics
LSM 2	Linear time-invariant systems	Diodes, diode models, and applications	Electrostatic field materials media
Subtopics	Continuous-time and discrete-time systems	Current-voltage (I-V) characteristics of diodes	Polarization of dielectrics, bound volume, and surface charge densities
	Linearity and Time-invariance	Approximating the I-V characteristics using ideal diode model and constant voltage model	Generalized Gauss' Law, dielectric boundary conditions
	Discrete-time LTI systems: convolution sum	Large and small signal model of diodes	Analysis of capacitors with homogeneous dielectrics
	Continuous-time LTI systems: convolution integral	Circuit application of diodes-rectifiers, voltage regulators, limiting circuits, voltage doublers	Analysis of capacitors with inhomogeneous dielectrics
	Properties of LTI systems: memory, causality, invertibility, stability, and unit step response		Electrical energy and energy density
	Causal LTI systems described by differential and difference equations		

interactive formative assessments provide students real-time feedback to gauge their understanding of the fundamental concepts. Data from these assessments inform the "flipped classroom" approach so that in-class time can be devoted to deeper discussions about how the theory and its applications relate to other anchoring concepts in the technical core. Moreover, the students are implementing the concepts they learned into a "virtual electromagnetics test bed" using MATLAB [35], as part of the creativity thread.

D. Example KI activity: Knowledge integration to understand why

To achieve the goal of helping students connect and integrate topics, and understand why they are learning material, KI activities utilize hands-on examples and group work to illustrate how concepts in different core competency areas are highly connected and interdependent to make a complex system function as intended [1]. Using familiar applications such as the smart phone or digital media player, these KI activities help students gain a better understanding of the contents in each LSM, and how anchoring concepts are implemented and applied to a complex piece of ubiquitous technology.

To demonstrate how our new pedagogical approach facilitates knowledge integration, we provide the following simple illustrative example of the first KI activity that was developed for LSMs 1 and 2, referred to earlier in Fig. 3 and Tables I and II. As shown in this example, KI activities serve as a vehicle for helping students grasp the commonality and correlations between concepts of electronics, electromagnetics, and signals and systems. All the faculty and students from the technical core of the junior year came together in one room to participate in this interactive, team-based learning exercise. An environment that lends itself to open dialogue, inquiry, and problem solving, the KI activity was an "aha moment" for students, as they could see firsthand how problems are approached from multiple perspectives, and how the content from the LSMs are integrated to form the building blocks of a smartphone.

1) Pre-work for KI activity: To prepare for the first KI activity, students were asked to study the basic functional building blocks of any smartphone. Armed with knowledge from the first set of LSMs, students were responsible for identifying what these functional blocks are and their connections to each other, which could be completed without having a detailed understanding of how each block operates. Starting with the simplest block, students were asked to identify the power supply or power management system (PMS) functional block. A schematic of a generic PMS was provided (Fig. 4.) for reference. Next, the students made a list of all possible concepts, from LSMs 1 and 2, relevant to understanding how a PMS operates.

2) Hands-on component of KI activity: After the conceptual discussion of the PMS, students were asked to perform a four-part KI activity that consisted of hands-on, lab-like exercises to be completed in groups.

(a) *Standard design problem* Each student was given a standard design problem in which they were asked to design a bridge rectifier circuit as shown in Fig. 4, with the bridge rectifier serving as the PMS. The specifications for the rectifier output voltage, V_{out}, was 3V DC with

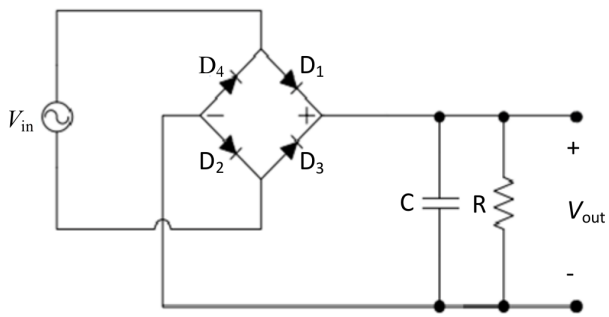

Fig. 4: Basic schematic of power management system

a ripple voltage of less than 10%. The components available to them were limited to four 1N914 diodes, a 10K Ω resistor, a capacitor of arbitrary value, and a 60 Hz AC source. To satisfy this design specification, students were asked what value of the capacitor they would need. In addition, prior to building the circuit, they were required to sketch the waveform they expected to see at V_{out} for a correct design, as well as answer the following theoretical questions regarding the rectifier circuit:

- Is this rectifier circuit, in practice, a linear or nonlinear circuit? Is there any way to validate your answer? (Hint: Can you combine different source waveforms from the function generator to demonstrate the principle of superposition?)
- Describe the charging and discharging action of the capacitor in the positive and negative half cycles from the concepts of E-field within a capacitor or charge stored by the capacitor.
- How would your V_{out} change if the capacitor prior to use in the rectifier held some nonzero charge?

Note that the answers to these questions require the students to use concepts from LSMs that would normally come from different courses.

Next, students were instructed to take a capacitor of value closest to what they would need to build the rectifier circuit of Fig. 4 and measure the output voltage of their physical circuit using an oscilloscope. They were then asked to explain the discrepancies between their expected (theoretical) output and that obtained from their physical circuit.

(b) *Comparing numerical results with observations: Tying theory of LSMs to circuit analysis* To illustrate the relevance of mathematical techniques to analyzing a real circuit, especially concepts of linearity and superposition, students worked in teams to explain how they could determine the output of their circuit from linear systems principles. In particular, they were asked to determine the impulse response of their simple linear system represented by the RC circuit. Realizing that it was difficult to approximate a theoretical impulse, they used a function generator to approximate a step function from a periodic square wave and then numerically differentiated the resulting output of the RC circuit to approximate its input response. They then convolved this with a signal obtained at the output of the bridge and compared this to the waveform that they experimentally obtained for V_{out}. This led to not only a discussion of the source of discrepancy between the two signals, but also a deeper appreciation of their ability to mathematically approximate the output of their PMS for different rectifier designs.

(c) *Design variations* To round out the first KI activity, students are placed into groups to tackle a specific design variation of the standard design problem outlined earlier. Each of the eight possible design variations is meant to illustrate a difference between the theoretically ideal components that are used in their mathematical analysis, and the properties of real components that are used to create physical products. These design variations provide concrete examples of how engineers are always dealing with models that are approximations to the physical world, and that one of their most important decisions is to determine what model provides the required level of fidelity.

E. Weaving knowledge threads throughout the curriculum

In addition to establishing the LSMs and KI activities for the junior year, thread champions and integration specialists have been working with fellow faculty to create a blueprint for weaving thematic content throughout the curriculum. The knowledge threads, which are defined in section II.B, embed in the learning experience many central concepts that impact a student's ability to become a well-rounded engineer. As shown in the snapshot of our new pedagogical model in section III.B, Fig. 3, these threads are now rooted in the LSMs and KI activities. Besides being tied to deeply technical content, the threads also extend beyond the technical core to stitch together and reinforce relevant themes from the freshman to senior years.

1) Foundations thread: Demonstrating the relevance of mathematics and science: Because a holistic understanding of ECE concepts is highly dependent on students' grasp of key topics in mathematics and science, the foundations thread is an essential ingredient in our retention efforts. Students in our department are often intimidated by the mathematics required for the major and struggle to see *why* math matters. The same is true of physics. While the foundations thread emphasizes subjects in math and science, this manuscript focuses on mathematics to provide an illustration of how the thread is being implemented.

Well-suited to spearhead the foundations thread, the math thread champion not only teaches subjects in the technical core, but he also holds a joint faculty appointment in the Department of Mathematics at CSU. The thread champion works in concert with a Graduate Teaching Fellow (GTF), an ECE Ph.D. student, to carry out the goals of the thread. Among her many activities, the GTF leads a special series of junior-level "foundations lectures" that augment the LSMs and KI activities. Because every component in the new pedagogical approach gives consideration to the system as a whole, her

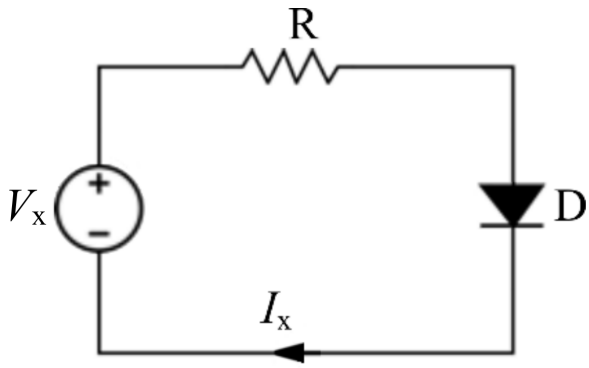

Fig. 5: Circuit diagram for illustrative example of the math foundations thread

lectures are intended to show students how mathematical topics are aligned with the anchoring concepts of the LSMs and KI activities. Outside of the technical core, the GTF holds weekly calculus recitation sessions for first-year engineering students to demonstrate the value of mathematics. Guiding students through mathematical problems, she builds motivation by putting the problem in the context of an engineering application, such as connecting surface integrals with flux calculations, or connecting partial fractions to calculating circuit responses. The idea is to show students that almost every calculation they perform is critical to solving engineering problems.

To better describe how the mathematics thread improves student learning, a simple illustrative example is provided below, in the context of electronics principles (ECE 331).

Illustrative Example: Consider the circuit in Fig. 5. Such circuits are encountered when introducing the very first anchoring concept of different diode models in the first week of LSM 2. Suppose we wish to calculate the current through the diode, I_x, for a given value of DC input voltage V_x , and series resistance, R. Using Kirchoffs Voltage Law, one would need to solve the nonlinear equation

$$V_x = I_x R + 0.026 \ln\left(\frac{I_x}{I_0}\right) \tag{1}$$

where I_0 is the saturation current of the diode.

To solve this nonlinear equation, the students need to use an iterative method, e.g., the Newton-Raphson method. The challenge is that students often do not remember such methods from their math courses. To address this issue, the GTF gives a math foundation lecture on iterative methods for solving nonlinear equations during the same week that diode models are covered in ECE 331, and we specifically apply these methods to examples of the type in (1), where the nonlinear equation involves equating an affine function of I_X to a logarithmic function of I_X. Later on, when small signal analysis is discussed in ECE 331 for linearizing diode models, a math foundation lecture on Taylor series and linearization is delivered by the GTF with specific examples revolving around linear approximations of logarithmic functions, as encountered in the diode equations. Through these lectures, the GTF is able to illustrate how the knowledge of mathematics facilitates learning in ECE 331.

2) Creativity thread: Designing the future: The creativity thread shines a light on the importance of creativity, research, and design in our discipline. This thread integrates the department's research efforts into the undergraduate learning experience and provides an avenue for graduate students to serve as research mentors to our undergraduates. Building on Olin College's work to create a "student-centered, people-first, project-based maker culture" [27], students are experiencing the excitement of engineering in the LSMs and KI activities because they are applying creative thinking and problem-solving skills to design challenges that emulate, and demonstrate connections to, the real world. Through project-based learning, students are able to see how creativity and innovation distinguish engineering from other disciplines, and how their knowledge is driving our technological future. In addition to the creative, collaborative activities in the technical core, each student takes part in a common set of design experiences, beginning early in the program with 200-level open-ended projects and culminating in the senior year with a capstone design project. Broader initiatives are also included in the creativity thread to engage students in design and allow them to tailor their plans of study to align with their passions. For example, CSU joined Georgia Techs Vertically Integrated Projects (VIP), a program that unites large teams of undergraduates with graduate students and faculty to work on long-term projects [36]. With the goal of increasing the number and diversity of graduates in the STEM disciplines, ECE students are able to participate in large-scale projects similar to those found in start-up environments. Additionally, students at any stage in the program now have a new independent study path, Open Option Projects, which allows them to design and build projects of their choice in a dedicated makerspace laboratory. As part of the Engineer in Residence (EiR) program, described in the next section, industry volunteers hold regular hours in the design lab to support the creative efforts of our students and lend important insights.

Finally, the creativity thread ensures continuity of optimization tools throughout the curriculum. As an example, we are leveraging our use of MATLAB by creating virtual environments that augment learning and inspire creativity. We also provide students with analog discovery devices that allow them to experiment and invent anytime, anywhere.

3) Professional formation thread: Developing critical skills for the 21st century: It is without question that to remain competitive as a nation within the worldwide economy, the United States must engender a new generation of engineers with superior skills and knowledge to excel [2]-[5][37].The importance of responding to needs of the profession has long been recognized by ABET [38] and the engineering community at large. The professional formation thread makes professional skills development a priority by reshaping the processes and value systems through which people become effective engineers in the 21st century [28]. A major goal of the professional formation thread is to create greater "fidelity," or meaningful experiences, that mimic the eventual working environment [38]. Backed by current engineering education

research and literature, the thread emphasizes five key areas: communications, cultural adaptability, ethics, leadership, and teamwork. Closely aligning with the skills required for a professional engineer in the 21st century [29], these topics are reinforced at multiple points throughout the curriculum through in-class activities and industry-led initiatives. Professional learning is now engrained in the LSMs and KI activities through hand-on scenarios that allow students to experience and work through real-world issues, such as ethical dilemmas, as a way of demonstrating how anchoring concepts are intertwined with professional topics. Activities that allow us to develop and assess students' communication skills are required at all levels of the program, and students are now required to work in teams throughout their undergraduate experience.

Leveraging our strong ties to industry, we have also implemented overarching initiatives that engage practicing engineers to help students develop professional skills and learn firsthand how that knowledge relates to the workplace. One such initiative is the Engineer in Residence program, a novel partnership with the IEEE that brings industry partners into our design laboratory to interact with students at all levels in the program. EiR volunteers share their enthusiasm for the profession by helping students overcome technical challenges, devise project plans and budgets, navigate their careers, and gain insights into life after CSU. From a recent study, *2015 Young Professionals Post-Graduation Survey* [39], respondents indicated the following:

- 59% need help developing a global perspective
- 55% need help choosing what industry to work in
- 48% need help with the transition from college to career.

The EiR program is designed to address all of these areas of need, particularly easing the transition between college and career, as EiR volunteers spend approximately half their time discussing career-oriented questions with students.

IV. PLANS FOR TESTING EFFICACY OF NEW TEACHING AND LEARNING MODEL

A. Introduction to assessment plans

To ensure we have the right ingredients for revolutionizing engineering education, we have designed an assessment and evaluation plan to test the efficacy of our new model through a mixed method, longitudinal study. The plan encompasses ABET's Engineering Criteria 2000 to ensure our program is providing graduates with the technical and professional skills employers demand. Ranging from evaluating student perceptions and competencies to understanding the organizational cultural impact, the two-pronged assessment plan addresses both the pedagogical and organizational changes. Prior to the launch of the RED initiative, we collected baseline data at predetermined points in the program to serve as a yardstick for measuring our success.

B. Pedagogical measures

The pedagogical assessment plan addresses the following key aspects of teaching and learning:

- *Characterizing the classroom environment* A teaching practices inventory (TPI) [40][41] has been implemented to analyze what is happening in the classroom and measure the level of student engagement. This involves a series of faculty self-assessments and thorough classroom observations conducted by CSU's Institute for Learning and Teaching. The TPI is designed to characterize the pedagogical behaviors of instructors in order for us to evaluate how the classroom environment and interactions impact learning.
- *Student perception and confidence* We are using an instrument adapted from multiple validated instruments [42]-[47], to assess students' self-perceptions about their 1) ability to use specific engineering skills, 2) ability and confidence in integrating content areas (i.e., math, science, and engineering), and 3) their motivations and intent to pursue engineering as a career. This is combined with a measure to gauge students' confidence in their knowledge of specific LSM-related content.
- *Mastery of core competencies* Providing a structure that is conducive to frequent, fine-grained assessments, competency-based evaluations are embedded in the LSMs to evaluate student mastery of fundamental concepts. As highlighted section II.C, we have implemented formative concept-level assessments that provide immediate feedback to students to help them see how well they understand the content. These pre-work assessments also provide valuable information to the course instructors, allowing them to tailor in-class instruction to meet the needs of the learners.
- *Assessing knowledge integration* Going well beyond the traditional course grading system, design tear-down problems were created to evaluate students' ability to integrate knowledge from the LSMs and apply it to a relatable problem. In addition to serving as an important barometer for testing our effectiveness as educators, the assessments give students useful feedback in the context of a real-world scenario.
- *Standardized concept inventories* Prior to the launch of the RED initiative, baseline data were collected to measure students' grasp of technical content. To test proficiency in electromagnetics, electronics, and signals and systems, three separate concept inventories were implemented with 25 validated questions apiece. An "apples to apples" analysis, the findings provide us with a useful measure to compare and contrast student mastery of technical content before and after the RED intervention.
- *Learning analytics* To help students learn more effectively through robust, integrative, and self-regulated learning, we are conducting research centered on the personalization of learning analytics. Leveraging decision-theoretic methodology, we have a faculty member investigating a new system for collecting and processing learning data into a format suitable for quantitative analysis. The goal of these automated assessments is to generate informative real-time feedback for both students and instructors to personalize learning and improve the quality of classroom instruction.

- *Comparisons with Similar Students* Comparing student outcomes within ECE over time only provides a slice of the projects overall efficacy. We will also measure differences between ECE students and a matched comparison of ME students on common course and student perception outcomes. These comparisons will provide a type of control group to help us better understand similar student outcomes in the absence of a larger-scale organizational change.

C. Organization change measures

With the goal of developing a solid perception of the department across a number of factors, the following organizational change measures are designed to assess the cultural impact of the new teaching and learning model:

- *Identifying existing culture and climate* The first year of our organizational analysis included a combination of qualitative and quantitative measures to develop a baseline understanding of the department culture and climate, as well as look for pockets of change-resistance to the RED initiative. It also served as a mechanism for characterizing the organizational environment in terms of structure, reward orientation, communication patterns, policymaking, and overall values.
- *Multiphase analysis of faculty and staff with comparison group* Using surveys, observational evaluations, and individual interviews with faculty and staff, multiple waves of data are being collected throughout the project to gain a well-rounded picture of the organization and how it changes over time. The mechanical engineering department at CSU is being studied as a comparison group.
- *Student perceptions of culture and climate* Much like the multiphase analysis of faculty and staff, we are conducting a series of surveys and observations of our student population to gauge the organizational cultural impact of change from the learners' perspective. In addition to comparing these data with faculty and staff perceptions to identify trends and gaps, the results will be scrutinized to flag specific concerns for women and underrepresented groups.
- *Student attitudes toward professionalism* An analysis was conducted to understand how students feel about the existing professional formation activities [26] [37]. These data allow us to compare attitudes toward professional skills development before and after the RED intervention.

V. EARLY SUCCESSES AND CHALLENGES OF THE "RED" APPROACH TO TEACHING AND LEARNING

Still very early in the RED project, we are energized by our initial successes, but the work has come with a set of challenges. It is well known that people are generally resistant to change, and the students enrolled in the technical core of the junior year are no exception. Dent and Goldberg [48] proposed that it is not the change itself against which people resist, but instead their concerns lie with the anticipated and unexpected consequences of change. Because we anticipated resistance from the junior-level students, we were not surprised to field many questions and concerns from them at the beginning of the fall 2016 semester. Students were clearly anxious and stressed as a result of our efforts. One student commented, "Can we just go back to doing lectures?" As outlined in section IV, we are collaborating with a social scientist at CSU to study the impact of the new approach and develop strategies for overcoming strains associated with the organizational and pedagogical changes, and she has been working with us to formulate appropriate responses to student concerns and anxieties. Though not yet empirically supported, we perceive positive shifts in attitudes as the project progresses.

Anecdotally, the LSMs and KI activities have been well received by many students. They like our hands-on, collaborative approach to teaching and learning, as well as the concrete exercises that tie anchoring concepts to relatable technological applications. Students also like how the interactive, formative assessments serve as an immediate gauge of their conceptual understanding of core topics because it helps them get more out of their in-class time. As we spelled out in the previous section, we are in the process of conducting studies to gather substantive data to evaluate the impact of our new approach, and while it is still too early to form data-driven conclusions, we anticipate further support and engagement from students as we dive deeper into the project. In support, data from the fall 2016 semester revealed that the number of students receiving Ds or Fs in the technical core has been cut in half as compared to fall 2015, indicating future potential.

On a broader scale, students across the undergraduate program are benefiting from the RED project. The new Engineer in Residence program is an example of a holistic effort that shows great promise for professional skills development at all levels. The program has significantly increased students' face-to-face interactions with industry, and survey results reveal that students and industry alike feel the initiative is valuable and important. Because of its effectiveness, the IEEE is supporting the EiR program again this year, and we have seen a marked increase in the number of interested volunteers representing a range of companies and areas of technical expertise. In addition to the EiR program, practicing professionals from companies such as Keysight Technologies are interacting with students in new ways to evaluate and grow their talents in testing and measurement, project management, and communications, and early findings show that the work is helping students master these critical skills [29]. Finally, our work to weave creativity throughout the program is gaining traction. Enrollments are up in our new Open Option Projects independent study option, and we are seeing increased interest, and diversity of participants, in our Vertically Integrated Projects program.

VI. SUMMARY AND NEXT STEPS

Early in this paper we spelled out the fundamental problems facing electrical and computer engineering education and the need for change. In the existing higher education structure, courses are delivered in silos, and students are not making connections between topics in the ECE curriculum, nor are

they seeing the practical relevance of their knowledge in the context of our global world. These issues are concerning, to say the least, and our team at Colorado State University is motivated to overcome the existing challenges to change the direction of our discipline. We have developed a new approach to teaching and learning that treats the undergraduate ECE degree as a complex system and enables a holistic view of the discipline.

In addition to highlighting the nuts and bolts of our new pedagogical and organizational model, we shared details about how the approach is being implemented and how we plan to assess our efforts. Our notion that change is difficult has been affirmed, and we will continue to measure the impact of the reorganization of faculty roles and teaching practices. While we are pleased with the early successes of the RED project, we are still working to overcome the obstacles associated with any large-scale change. As part of our roadmap for scaling and adapting this project to other institutions, it is our responsibility to inform our colleagues about what strategies have, and have not, been effective. This is a long-term research project, and we will continue to share the successes and failures of the RED project with the engineering community, as we strive to lead revolutionary change in ECE education and carry out the visions of engineering in the 21st century.

Acknowledgments

We would like to thank the reviewers for their thoughtful feedback that helped us to improve the presentation of our work. We would also like to thank our graduate students Ryan McCullough and Christopher Robbiano for their tireless efforts to ensure that this paper was properly formatted.

References

[1] T.W. Chen, A. A. Maciejewski, B.M. Notaros, A. Pezeshki, and M. D. Reese, "Mastering the Core Competencies of Electrical Engineering Through Knowledge Integration," in *ASEE Annual Conference and Exposition*, New Orleans, LA, USA, 2016. [Online]. Available: https://www.asee.org/public/conferences/64/papers/16305/view

[2] National Academy of Engineering, *The Engineer of 2020: Visions of Engineering in the New Century*, Washington, DC, USA: The National Academies Press, 2004.

[3] National Academy of Engineering, *Educating the Engineer of 2020: Adapting Engineering Education to the New Century*, Washington, DC, USA: The National Academies Press, 2005.

[4] S. Sheppard, K. Macatangay, A. Colby, W.M. Sullivan, *Educating Engineers: Designing for the Future of the Field*, San Francisco, CA, USA: Jossey-Bass, Inc., 2008.

[5] National Academy of Engineering, *Grand Challenges for Engineering: Imperatives, Prospects, and Priorities: Summary of a Forum*, Washington, DC, USA: The National Academies Press, 2016.

[6] B. Yoder, "Engineering by the Numbers," in *Engineering College Profiles & Statistics*, Washington, DC, USA: ASEE, 2015, pp. 11-47. [Online]. Available: https://www.asee.org/papers-and-publications/publications/college-profiles#Online_Profiles

[7] Colorado State University Institutional Research, "Undergraduate Student Success, Persistence by Department," Colorado State University. Fort Collins, CO, USA. [Online] Available http://www.ir.colostate.edu/data-reports/all-interactive-reports//

[8] T. Wilbur and V. Roscigno, "First-generation Disadvantage and College Enrollment/Completion," *Socius*, vol. 2, pp. 1-11, Aug. 2016.

[9] X. Chen, "STEM Attrition: College Students Paths Into and Out of STEM Fields," National Center for Education Statistics, Inst. of Education Sciences, U.S. Dept. of Education. Washington, DC, USA. (NCES 2014-001). [Online]. Available: https://nces.ed.gov/pubsearch/pubsinfo.asp?pubid=2014001rev

[10] P. Daempfle, "An Analysis of the High Attrition Rates Among First Year College Science, Math, and Engineering Majors," *J. of College Student Retention: Research, Theory & Practice*, vol. 5, no. 1, pp. 37-52, 2003.

[11] L.Y. Santiago and R. A.M. Hensel, "Engineering Attrition and University Retention," in *ASEE Annual Conference and Exposition*, San Antonio, TX, USA, 2012.

[12] C. Adelman, "Women and Men of the Engineering Path: A Model for Analyses of Undergraduate Career," Nat. Inst. on Postsecondary Education, Libraries, and Lifelong Learning, Washington DC, USA, 1998.

[13] ECEDHA, "Workshop on the Strategic Shaping of ECE: Vision, Branding and Advocacy," ECEDHA, Atlanta, GA, USA, 2016, [Online]. Available: http://www.ecedha.org/conferences/meetings_2/2016-ece-vision-workshop.

[14] R.K. Porter and H. Fuller, "A New 'Contact-Based' First Year Engineering Course," *J. of Engineering Education*, vol. 87, no. 4, pp.399-404, 1998, [Online].

[15] R.G. Quinn, "Drexels E4 Program: A Different Professional Experience for Engineering Students and Faculty," *J. of Engineering Education*, vol. 82, no. 4, pp. 196-202, 1993.

[16] N.A. Pendergrass, R.N. Laoulache, J.P. Dowd, R.E. Kowalczyk, "Efficient Development and Implementation of an Integrated First Year Engineering Curriculum," in *Frontiers in Education Conf.*, Dartmouth, MA, USA, 1998.

[17] J. R. Parsons, J.E. Seat, R.M Bennett, J.H. Forrester, F.T. Gilliam, P.G. Klukken, C.D. Pionke, D.R. Raman, T.H. Scott, W.R. Schleter, and F.E. Weber, "The Engage Program: Implementing and Assessing a New First Year Experience at the University of Tennessee," *J. of Engineering Education*, vol. 91, no. 4, pp. 441-446, 2002.

[18] J. E. Froyd, "The Engineering Education Coalitions Program," in *Educating the Engineer of 2020: Adapting Engineering Education to the New Century*, Washington, D.C., USA: National Academies Press, 2005.

[19] J. Bordogna, E. Fromm, and E. Ernst, "Engineering Education: Innovation Through Integration," *J. of Engineering Education*, vol. 82, no. 1, pp. 3-8, 1993.

[20] L.J. Everett, P.K. Imbrie, and J. Morgan, "Integrated Curricula: Purpose and Design," *J. of Engineering Education*, vol. 89, no. 2, pp. 167-176, 2000.

[21] L.D. Fink, R.L. Kolar, K.K. Muraleetharan, R.W. Nairn, D.A. Sabatini, R.L. Sack, T.R. Rhoads, and D.L. Shirley, "Reengineering sooner civil engineering education," in *Frontiers in Education Conf.*, Washington, DC, USA, 2000, pp. 3-8.

[22] J.E. Froyd and M.W. Ohland, "Integrated Engineering Curricula," J. of *Engineering Education*, vol. 94, no. 1, pp. 147-164, 2005.

[23] J. Heywood, *Engineering Education : Research and Development in Curriculum and Instruction*, Hoboken, NJ, USA: IEEE Press; Wiley-Interscience, 2005.

[24] L. Kiaer, "Integrating Integration," in *ASEE Annual Conference and Exposition*, Washington, DC, USA, 1996, pp. 1.263.1-1.263.5.

[25] Olin College, "Academic Life at Olin College," [Online] Available: http://www.olin.edu/academics/curriculum.aspx

[26] T.J. Siller and J. Durkin, University-Industry Partnership to Develop Engineering Students' Professional Skills, *Intl. J. of Engineering Education*, vol. 29, no. 5, p. 1166-1171, 2013.

[27] T. Vander Ark, "Reengineering HigherEd: Student-Centered Learning at Olin College," Getting Smart, 2016, [Online] Available: http://www.gettingsmart.com/2016/10/reengineering-higher-ed/

[28] National Science Foundation, "IUSE/Professional Formation of Engineers: Revolutionizing Engineering Departments (RED)," Program Solicitation NSF 14-602.

[29] A. Rosales, A. Leland, O. Notaros, R. Toftness, T. Siller, M. de Miranda, A. Cook, M. D. Reese, Z. Byrne, J. Weston, and A. A. Maciejewski, "Preliminary Work on Weaving Professionalism Throughout the Engineering Curriculum," in *ASEE Annual Conference and Exposition*, New Orleans, LA, USA, 2016. [Online]. Available: https://www.asee.org/public/conferences/64/papers/16532/view

[30] A.M. Bentley, S. Artavanis-Tsakonas, and J.S. Stanfortd, "Nanocourses: A Short Course Format as an Educational Tool in a Biological Sciences Graduate Curriculum," *Life Sciences Education*, vol.7, no. 2, pp. 175-183, 2008.

[31] J.L. Gutlerner and D. Van Vactor, "Catalyzing Curriculum Evolution in Graduate Science Education," *Cell*, vol.153, no. 4, pp. 731-736, 2013.

[32] J. Borgford-Parnell, K. Deibel, and C.J. Atman, "From engineering design research to engineering pedagogy: Bringing research results directly to the students," *Int. J. of Engineering Education*, vol. 26, no. 4, pp.748-759, Jan., 2010.

[33] B. M. Notaros, *Conceptual Electromagnetics*, 530 pages, CRC Press, Taylor and Francis, LLC, 2016, in press.

[34] B. M. Notaros, *Electromagnetics*, 840 pages, PEARSON Prentice Hall, 2010.

[35] B. M. Notaros, *MATLAB-Based Electromagnetics*, 416 pages, PEARSON Prentice Hall, 2013.

[36] Georgia Technical University, "Vertically Integrated Projects Program," [Online], Available: http://www.vip.gatech.edu/.

[37] T. Siller, A. Rosales, J. Haines, and A. Benally, "Development of Undergraduate Students' Professional Skills," *J. of Professional Issues in Engineering Education and Practice*, vol. 135, no. 3, p. 102-108, 2009.

[38] L.J. Shuman, M. Besterfield-Sacre, and J. McGourty, "The ABET 'professional skills' can they be taught? Can they be assessed?" *J. of Engineering Education*, vol. 94, no. 1, pp. 41-55, 2005.

[39] The Wedewer Group, *IEEE 2015 Young Professionals Post-Graduation Experience Survey*.

[40] C. Wieman, "A Better Way to Evaluate Undergraduate Teaching," *Change: The magazine of higher learning*, vol. 47, no. 1, pp. 6-15, Feb. 2015, DOI: 10.1080/0091383.2015996077.

[41] C. Wieman, and S. Gilbert, "The Teaching Practices Inventory: A New Tool for Characterizing College and University Teaching in Mathematics and Science," *CBELife Sciences Education*, vol. 13, no. 3, pp. 552-569. DOI: 10.1187/cbe.14-02-0023

[42] M. Besterfield-Sacre, C. J. Atman, and L. J. Shuman, "How freshman attitudes change in the first year," in *ASEE Annual Conference and Exposition*, Anaheim, CA, USA, 1995, vol. 1, pp. 157-163.

[43] M. Besterfield-Sacre, C. J. Atman, and L. J. Shuman, "Characteristics of freshman engineering students: Models for determining student attrition in engineering," *J. of Engineering Education*, vol. 86, no. 2, pp. 139149, Apr. 1997.

[44] M. Besterfield-Sacre, M. Moreno, L. J. Shuman, and C. J. Atman, "Self-assessed confidence in EC-2000 outcomes: A study of gender and ethnicity differences across institutions," *J. of Engineering Education*, vol. 90, no. 4, pp. 477489, 2000.

[45] S. A. Bjorklund and N. L. Fortenberry, "Measuring student and faculty engagement in engineering education," Washington, DC, USA: *The National Academy of Engineering*, 2005.

[46] E. Cady, N. L. Fortenberry, M. Drewery, and S. A. Bjorklund, "Validation of surveys measuring student engagement in engineering, Part 2," in *ASEE Annual Conference and Exposition*, Austin, TX, USA, 2009, pp. 14.1344.1-14.1344.20.

[47] M. A. de Miranda, K. E. Rambo-Hernandez, and P. R. Hernandez, "Measuring Student Content Knowledge, iSTEM, Self-Efficacy, and Engagement through a Long-Term Engineering Design Intervention," in *ASEE Annual Conference and Exposition*, New Orleans, LA, USA, 2016, 10.18260/p.25694.

[48] E.B. Dent and S.G. Goldberg, "Challenging 'resistance to change'," *J. of Applied Behavioral Science*, vol. 35, no. 1, pp. 25-41, Mar. 1999, DOI: 10.1177/0021886399351003.

Anthony A. Maciejewski received the B.S., M.S., and Ph.D. degrees from Ohio State University, Columbus in 1982, 1984, and 1987, respectively. From 1988 to 2001, he was a professor of electrical and computer engineering at Purdue University, West Lafayette. He is currently a professor and head of the Department of Electrical and Computer Engineering at Colorado State University. He is a fellow of the IEEE. A complete vita is available at: https://www.engr.colostate.edu/~aam.

Thomas W. Chen received his Ph.D. from the University of Edinburgh. After spending four years with Philips Semiconductors in Europe, he joined the Department of Electrical and Computer Engineering at Colorado State University. Prof. Chen published more than 180 journal and conference papers in the areas of analog and digital VLSI design and CAD for VLSI design. Chen served as general chair of the 2015 IEEE Midwest Symposium on Circuits and Systems, and as guest editor of the IEEE Transactions on Computer-Aided Design of Integrated Circuits and Systems in 2005. He was also the guest editor of the Microelectronics Journal on Quality Electronic Design in 2005. His research interests include VLSI circuit and system design, CAD methodology for VLSI design, and bioelectronics.

Zinta S. Byrne is a tenured full professor of psychology at Colorado State University. She earned her M.S. and Ph.D. degrees in Industrial and Organizational Psychology, and holds a double major B.S. degree in Computer Science and Mathematics. Her previous careers were as software design and development engineer, and project and program manager for Hewlett-Packard Company, and management consultant for Personnel Decisions International, before becoming a professor at CSU. She is author of "Understanding Employee Engagement: Theory, Research, and Practice" and "Organizational Psychology and Behavior: An Integrated Approach to Understanding the Workplace." She has served as an associate editor for the Journal of Managerial Psychology, currently serves on several editorial boards, and has published in peer-reviewed scientific academic and practice outlets. She has her own consulting practice, Atniz Consulting, LLC, working with organizations around the country focusing on their organizational culture and leadership to maximize employee engagement.

Michael A. de Miranda is a professor, Claude H. Everett, Jr. Endowed Chair, and Head of the Department of Teaching, Learning, and Culture at Texas A&M University. Prior to joining Texas A&M, he served as a professor of Engineering Education in the School of Education and Department of Electrical and Computer Engineering at Colorado State University. Professor de Miranda's research focuses on the development of young STEM educators for the future of our profession, specifically in learning, cognition, and instruction in engineering and technology education. A graduate of the University of California in Educational Psychology, his research is focused on the study of cognitive process and complex classroom interventions associated with achieving scientific and technological literacy through engineering content.

Laura B. Sample McMeeking is the associate director of the CSU STEM Center. She earned a Master of Science degree in Atmospheric Sciences and Meteorology and a Ph.D. in Education and Human Resource Services from Colorado State University. In her current role as associate director for the STEM Center at Colorado State University, she collaborates with faculty and staff inside and outside the university to develop and implement high-quality research and evaluation in STEM education. Her primary research focuses on STEM professional development at multiple levels, including preservice and in-service teachers, university undergraduate and graduate students, postdoctoral researchers, and faculty. Specifically, she is interested in understanding how professional development leads to changes in knowledge, attitudes, skills, and behaviors in STEM, particularly with regards to instructional and professional practice.

Branislav M. Notaros is a professor and University Distinguished Teaching Scholar in the Department of Electrical and Computer Engineering at Colorado State University, where he also is director of the Electromagnetics Laboratory. Notaros received a Ph.D. in electrical engineering from the University of Belgrade, Yugoslavia, in 1995. His research publications in computational and applied electromagnetics include more than 180 journal and conference papers. He is the author of textbooks Electromagnetics (2010) and MATLAB-Based Electromagnetics (2013), both with Pearson Prentice Hall. Notaros is the recipient of the 1999 IEEE Marconi Premium, 2005 IEEE MTT-S Microwave Prize, 2005 UMass Dartmouth Scholar of the Year Award, 2012 Colorado State University System Board of Governors Excellence in Undergraduate Teaching Award, 2012 IEEE Region 5 Outstanding Engineering Educator Award, 2014 Carnegie Foundation for the Advancement of Teaching Colorado Professor of the Year Award, 2015 American Society for Engineering Education ECE Distinguished Educator Award, 2015 IEEE Undergraduate Teaching Award, and many other research and teaching awards. He is an IEEE Fellow for contributions to higher order methods in computational electromagnetics.

Ali Pezeshki received the BSc. and MSc. degrees in electrical engineering from University of Tehran, Tehran, Iran, in 1999 and 2001, respectively. He earned his Ph.D. degree in electrical engineering at Colorado State University in 2004. In 2005, he was a postdoctoral research associate with the Electrical and Computer Engineering Department at Colorado State University. From January 2006 to August 2008, he was a postdoctoral research associate with The Program in Applied and Computational Mathematics at Princeton University. In August 2008, he joined the faculty of Colorado State University, where he is now an associate professor in the Department of Electrical and Computer Engineering and the Department of Mathematics. His research interests are in statistical signal processing, coding theory, applied harmonic analysis, and bioimaging.

Sourajeet Roy received the B.Tech. degree from Sikkim Manipal University, Gangtok, India, in 2006, and the M.E.Sc. and Ph.D. degrees from Western University, London, ON, Canada, in 2009 and 2013, respectively, all in electrical engineering. Roy currently serves as an assistant professor with the Department of Electrical and Computer Engineering at Colorado State University. His current research interests include modeling and simulation of high speed circuits, signal and power integrity analysis of electronic packages, and uncertainty quantification of microwave/ RF circuits. Dr. Roy was the 2006 recipient of the Vice-Chancellors Gold Medal, the Queen Elizabeth II Graduate Scholarship in Science and Technology in 2012, and the Ontario Graduate Scholarship in 2012. He currently serves as a guest associate editor for IEEE Transactions on Components, Packaging, and Manufacturing.

Andrea M. Leland has distinguished herself as a dynamic communicator and tireless ambassador of engineering education and research, with nearly twenty years combined experience in higher education and private industry. For the past 13 years she has worked in the Department of Electrical and Computer Engineering at Colorado State University to advance its mission through well-planned communication strategies and relationship building. Leland has played an integral role in engaging industry to guide the departments professional formation efforts to prepare students for an increasingly global profession. Leland holds a Bachelors of Science in Organizational Communications and Marketing from the University of Central Missouri.

Melissa D. Reese received a B.S. in International Business/Finance and an MBA in Management/Organizational Development from Rochester Institute of Technology in 1998 and 2006, respectively. She is currently the department manager of Electrical and Computer Engineering at Colorado State University.

Alma H. Rosales received her bachelors and masters degrees in mathematics from the University of Texas. Rosales joined IBM Austin in 1976 as a communications programmer, and held numerous technical and management positions within IBM. In 2003, Rosales was named director of Worldwide Enablement Services in the Integrated Supply Chain Division, where she managed 300 people in 21 locations around the world. From January 2007 to December 2008, Rosales was an IBM executive on loan to Colorado State University, as part of the IBM Faculty Loan program. She was instrumental in establishing the Professional Learning Institute within the College of Engineering. Rosales served as program director of Mexican American Engineers and Scientists and co-chair of the Texas Science and Engineering Festival in 2010 and 2011. In September 1998, Hispanic Engineer and Information Technology Magazine recognized Rosales for her many contributions to her industry, naming her one of its 50 "Women Who Make a Difference." Rosales currently serves as the professional formation thread champion for the "RED" initiative underway in the Department of Electrical and Computer Engineering at Colorado State University.

Thomas J. Siller has been a faculty member in the Civil and Environmental Engineering Department at Colorado State University since 1988. He received his Ph.D. in Civil Engineering from Carnegie Mellon University in 1988. From 2002-2015 he served as the associate dean for Academic and Student Affairs in the College of Engineering. Current areas of research focus on: sustainable development and engineering. with a particular focus on education; pre-collegiate engineering education; professional skill development, and global engineering education. Additionally, he runs an education abroad course at Hunan University in Changsha, China.

Richard F. Toftness received the B.S.E.E. and M.S.E.E. (with distinction) degrees in Electrical Engineering from the University of Minnesota and has been working in various technical professional roles for more than 40 years. He has worked for Fortune 500 companies, small private firms, and has owned his own business. He has managed large multi-function organizations and R&D departments, manufacturing operations, and quality departments in the United States and internationally. During his career, he has been part of three startup businesses, starting one from scratch and attempting to rescue two others. Richard is known for his ability to look past the trendy silliness that many organizations get enamored with and get to the core of what people need to do to be productive professionals. Richard is a recipient of a 2012 Academy Award (Oscar) for technical development of the Phantom High Speed Camera in additional to other awards for professional achievement and volunteer leadership roles. Most recently, Richard has organized a volunteer effort in partnership with IEEE, the Engineer in Residence program, which brings together engineering professionals and students at Colorado State University.

Olivera Notaros has completed undergraduate and graduate studies in the Department of Electrical and Computer Engineering in Belgrade, Serbia. She has held multiple university teaching positions since 1990. She is currently an adjunct faculty member and head of student projects in the Department of Electrical and Computer Engineering at Colorado State University. Notaros also leads the creativity thread of the ECE department's "RED" initiative.