PhD Preliminary Exam
Dec. 1, 2011

Sensing, Communications and Monitoring for Smart Grid

Dongliang Duan

Advisor: Dr. Liuqing Yang

Committee Members:
Dr. Rockey J. Luo, Dr. Louis L. Scharf, Dr. Rui Song

Outline

- Introduction: Smart Grid and Situational Awareness
- Green Communications for Sensor Networks
  - Modulation Selection
  - Cooperative Relay Section
- Cognitive Radio for Bandwidth Reutilization
  - Non-Cooperative Spectrum Sensing (NCoS)
  - Cooperative Spectrum Sensing with Soft Information Fusion (SCoS)
  - Cooperative Spectrum Sensing with Hard Information Fusion (HCoS)
- Phasor State Estimation with Bad Data Processing
  - Equivalence between Bad Data Subtraction and Removal
  - Algorithms for Bad Data Processing
- Summary and Future Work

Roadmap

- Introduction: Smart Grid and Situational Awareness
- Green Communications for Sensor Networks
  - Modulation Selection
  - Cooperative Relay Section
- Cognitive Radio for Bandwidth Reutilization
  - Non-Cooperative Spectrum Sensing (NCoS)
  - Cooperative Spectrum Sensing with Soft Information Fusion (SCoS)
  - Cooperative Spectrum Sensing with Hard Information Fusion (HCoS)
- Phasor State Estimation with Bad Data Processing
  - Equivalence between Bad Data Subtraction and Removal
  - Algorithms for Bad Data Processing
- Summary and Future Work

Introduction

A **smart grid** is a digitally enabled electrical grid that gathers, distributes, and acts on *information* about the behavior of all participants (suppliers and consumers) in order to improve the efficiency, reliability, economics, and sustainability of electricity services. [wiki]

Support: digitally enabled

Actions: gather, distribute, act

Goals: efficiency, reliability, economics, sustainability

Center: information

Smart gird: an interdisciplinary research area

Obtaining Situational Awareness

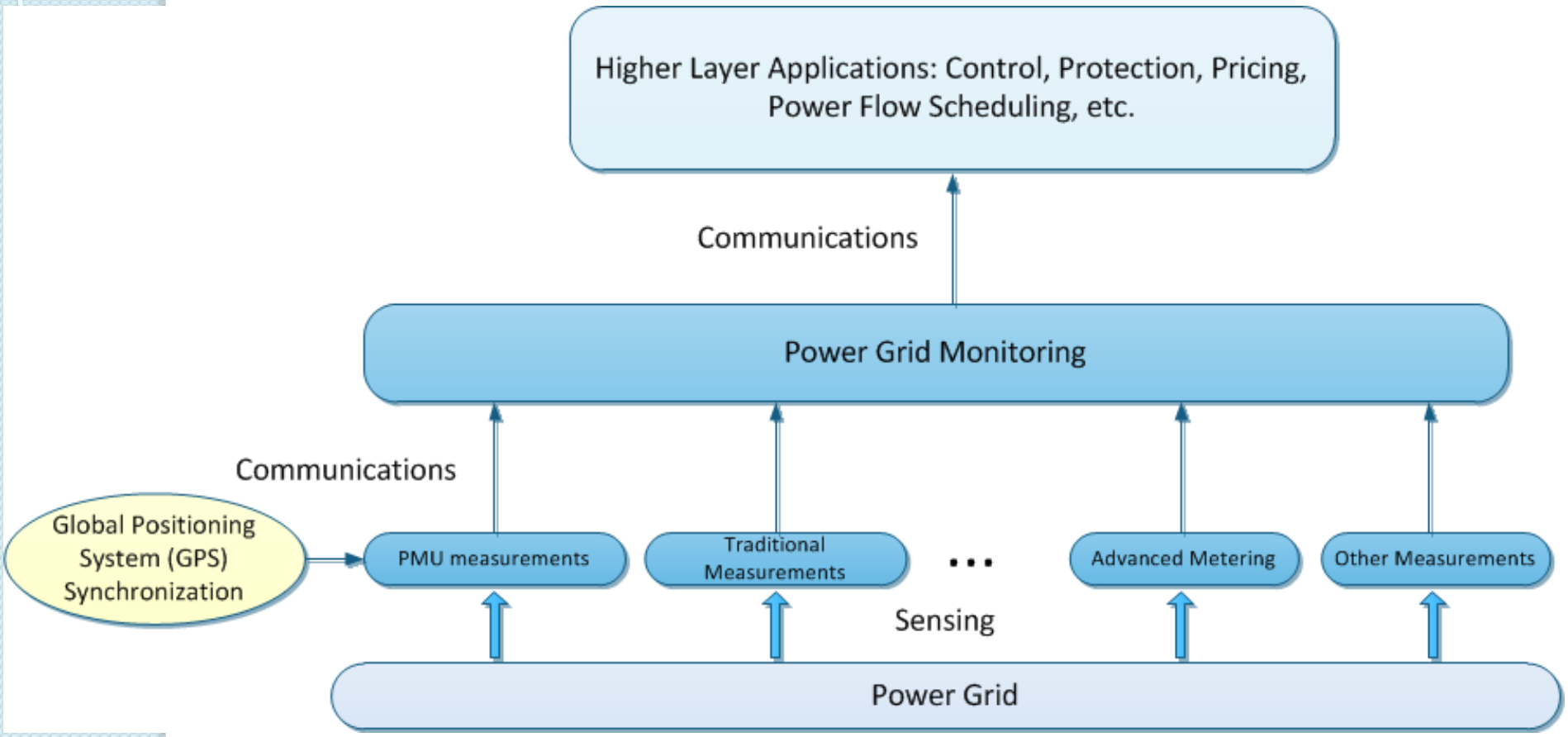

- **Sensing:** more advanced measurement devices
- **Communications:** achieve desired quality of service (QoS)
- **Monitoring:** more sophisticated signal processing techniques

Communications for Smart Grid

- Feature: heterogeneity [Wang-Xu-Khanna'11]
- Candidates: optical, computer networks, power line communications, wireless communications ….
- Wireless communications:
  - Pros:
    - Easy implementation
    - Low cost
  - Cons:
    - Not "green": driven by batteries ⇒ green communications
    - Limited wireless spectrum resources ⇒ existing unlicensed spectrum band and cognitive radio

Roadmap

- Introduction: Smart Grid and Situational Awareness
- Green Communications for Sensor Networks
  - Modulation Selection
  - Cooperative Relay Section
- Cognitive Radio for Bandwidth Reutilization
  - Non-Cooperative Spectrum Sensing (NCoS)
  - Cooperative Spectrum Sensing with Soft Information Fusion (SCoS)
  - Cooperative Spectrum Sensing with Hard Information Fusion (HCoS)
- Phasor State Estimation with Bad Data Processing
  - Equivalence between Bad Data Subtraction and Removal
  - Algorithms for Bad Data Processing
- Summary and Future Work

Green Communications: Motivations

- Wireless sensor networks (WSN)
  - Powered by non-renewable batteries $\Rightarrow$ energy efficiency critical
  - Short inter-node distance $\Rightarrow$ circuit power may be non-negligible
  - Complexity constrained $\Rightarrow$ low complexity modulation scheme and communications strategy
- Ways to improve the battery energy efficiency:
  - High energy-efficient modulation schemes
  - Cooperative communications (relay networks) to combat the fading effect
- Realistic considerations
  - *Nonlinear* battery discharge process
  - Extra *circuit* power consumptions

System Model: Battery & Node Model

- Battery discharge current i with PDF $f(i)$
- Average power consumption: $\mathcal{P} = \int_{I_{\min}}^{I_{\max}} Vi \cdot f(i) \cdot di$
- Linear battery model:
  - Average actual power consumption (AAPC): $\mathcal{P}_0 = \mathcal{P}$
- Nonlinear battery model [Pedram-Wu'99]:
  - AAPC: $\mathcal{P}_0 = \int_{I_{\min}}^{I_{\max}} \frac{Vi}{\mu(i)} \cdot f(i) \cdot di \Rightarrow \mathcal{P}_0 = \int_{t_{\min}}^{t_{\max}} \frac{Vi(t)}{\mu(i(t))}\, dt$
  - Battery efficiency factor:

$$\mu(i) = 1 - \omega i,\ \omega > 0 \Rightarrow \mu(i) \in [0.5, 1) \Rightarrow \mathcal{P}_0 > \mathcal{P}$$

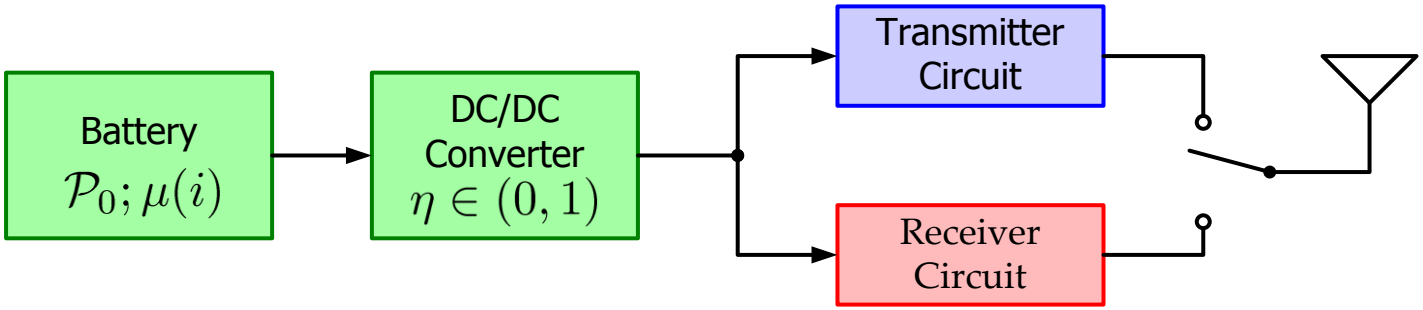

System Model: the Wireless Link

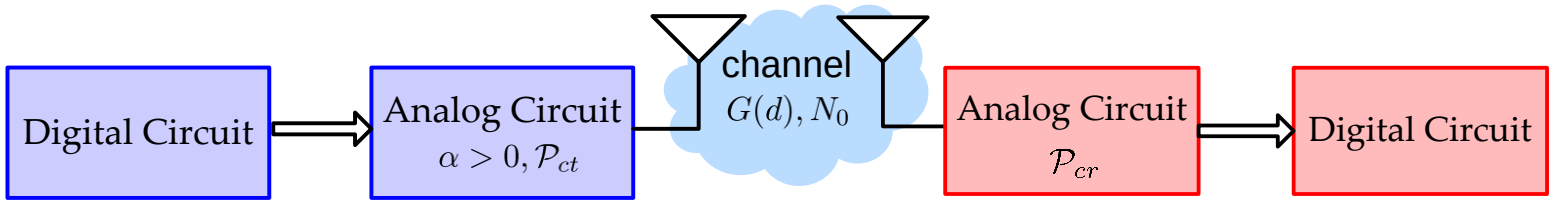

- Power consumption:
  - Power carried by the transmitted pulse: $\mathcal{E}_p$
  - Analog circuit power consumption: $\mathcal{P}_{ct}, \mathcal{P}_{cr}$
  - Extra power amplifier (PA) loss: $\alpha > 0$
- Wireless channel:
  - Path-loss channel gain: $G(d) = \mathcal{E}_t / \mathcal{E}_r = M_l d^K G_1$
  - Rayleigh fading
  - Additive white Gaussian noise (AWGN)
- Energy requirement
  - Desired energy/bit at the Rx: $\mathcal{E}_{b,r}$
  - Desired energy/bit at the Tx: $\mathcal{E}_{b,t} = \mathcal{E}_{b,r} G(d)$

Transmitter energy consumption for single pulse transmission

Lemma 1: *The total battery energy consumption (BEC) for transmitting a single pulse p(t) with duration T_p and energy $\mathcal{E}_p$ is approximately:*

$$\mathcal{E}_{0t} = \frac{\omega\gamma_p(1+\alpha)^2}{V\eta^2}\mathcal{E}_p^2 + \frac{1+\alpha}{\eta}\mathcal{E}_p + \frac{\mathcal{P}_{ct}}{\eta}T_p$$

where: $\gamma_g = \int_0^{T_p}(g_0(t))^2\,dt$ *depends on the normalized pulse shape $g_0(t)$.*

1. Second-order term: <u>battery nonlinearity</u>
2. First-order term: <u>pulse energy</u>
3. Constant term: <u>circuit energy consumption</u>

α: effect of PA

η: effect of DC/DC converter

Receiver energy consumption for single pulse transmission

- At receiver:
  - No PA $\Rightarrow$ no α term
  - Very small current $\Rightarrow$ battery nonlinearity negligible
- Circuit power on for demodulation at symbol duration: $\mathcal{E}_{0r} = \frac{\mathcal{P}_{cr}}{\eta} T_s$
- Only determined by the symbol duration

Modulation Schemes: PPM vs. FSK

- Both orthogonal modulation schemes: theoretically same energy efficiency
- Realistic considerations for PPM and FSK
  - PPM at Tx:
    - ✓ Shorter pulse: less circuit energy consumption
    - ✗ Larger current: lower battery efficiency
  - FSK at Tx:
    - ✗ Longer pulse: more circuit energy consumption
    - ✓ Smaller current: higher battery efficiency
  - PPM and FSK at Rx: exactly the same
- Intuition for selection of PPM and FSK
  - Shorter inter-node distance: circuit energy consumption dominant $\Rightarrow$ PPM better
  - Longer inter-node distance: battery efficiency factor dominant $\Rightarrow$ FSK better

Analytical Comparison

Lemma 2: *The difference between the average battery energy consumption of FSK and PPM to achieve the same target BER can be expressed as:*

$$\Delta\mathcal{E}_0^{FP} = k_2 d^{2K} + k_0$$

Where: $k_2 = (1-M)\frac{2\pi^2 M_l^2 G_1^2 \omega(1+\alpha)^2}{T_s V \eta^2 \log_2 M}\mathcal{E}_{sr} < 0$

$k_0 = \frac{M-1}{M^2}\frac{\mathcal{P}_{ct} T_s}{\eta \log_2 M} > 0$

Proposition 1: *There is a critical distance* $d_c = \left(-\frac{k_0}{k_2}\right)^{\frac{1}{2K}}$ *such that when the inter-node transmission distance* $d < d_c$, *M-PPM consumes less battery energy than M-FSK and vice versa.*

Numerical Results

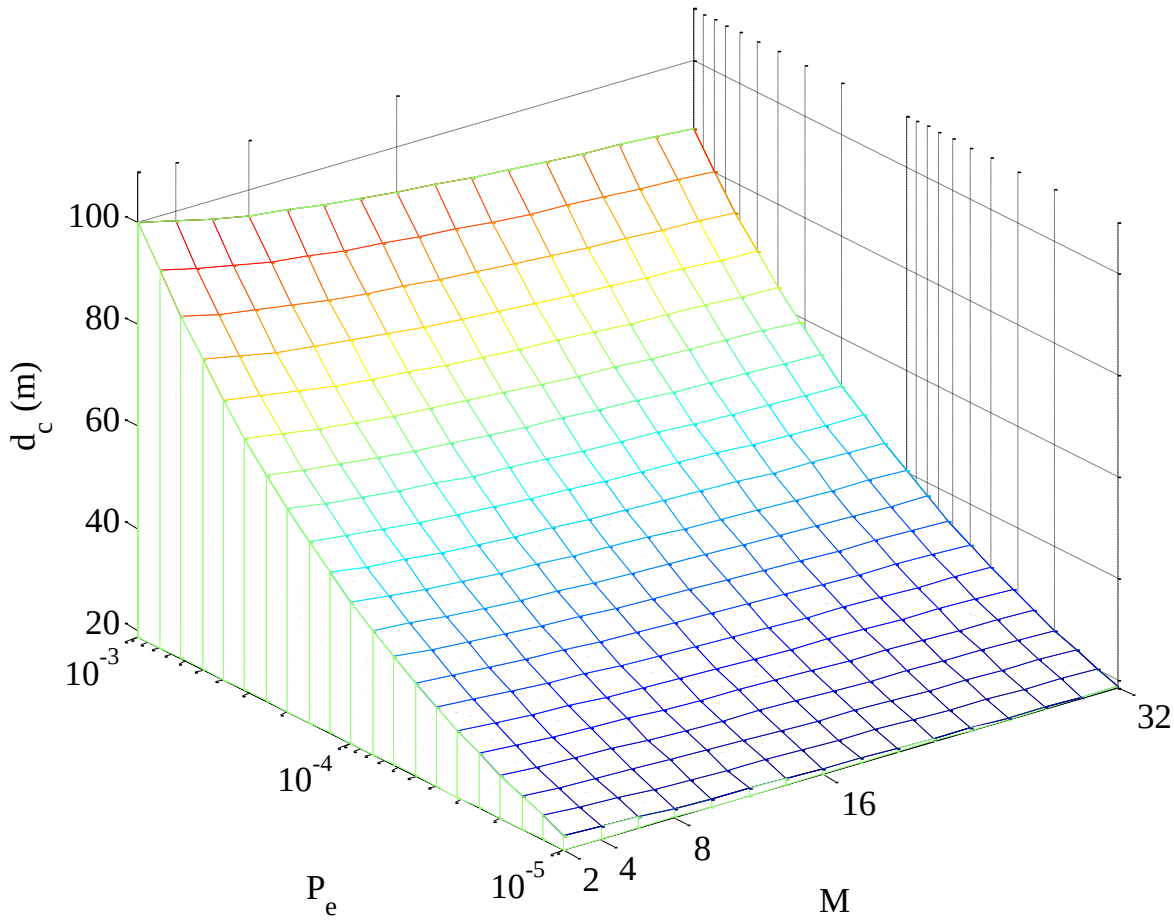

Above the surface: PPM zone;
Below the surface: FSK zone.

Roadmap

- Introduction: Smart Grid and Situational Awareness
- Green Communications for Sensor Networks
  - Modulation Selection
  - Cooperative Relay Section
- Cognitive Radio for Bandwidth Reutilization
  - Non-Cooperative Spectrum Sensing (NCoS)
  - Cooperative Spectrum Sensing with Soft Information Fusion (SCoS)
  - Cooperative Spectrum Sensing with Hard Information Fusion (HCoS)
- Phasor State Estimation with Bad Data Processing
  - Equivalence between Bad Data Subtraction and Removal
  - Algorithms for Bad Data Processing
- Summary and Future Work

Motivation

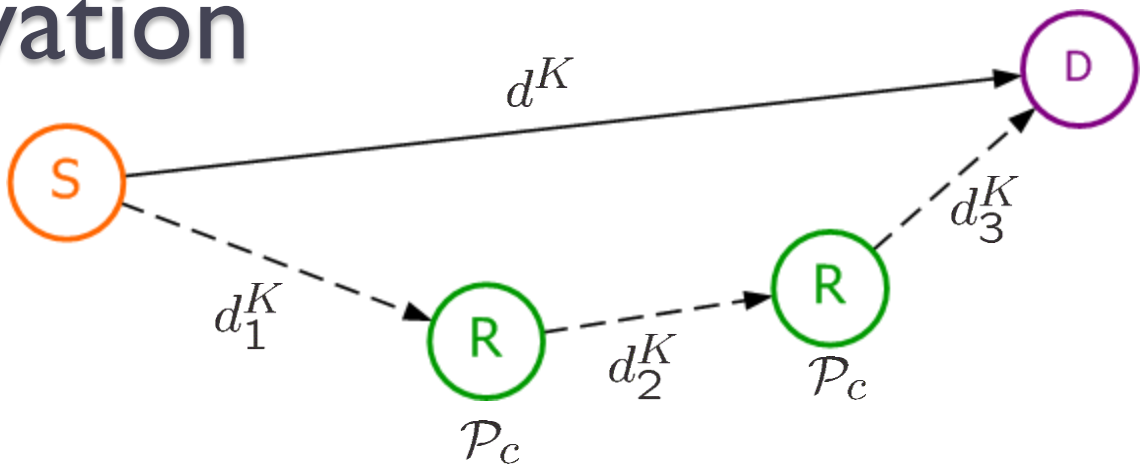

- Battery energy consumption (BEC) is expected to be significantly reduced by…
  - Relaying vs. direct transmission
  - Multiple smaller Tx-Rx distances vs. a long link
  - Decreased path loss vs. large path loss: $d_1^K d_2^K d_3^K < d^K$
- Not always more energy efficient:
  - Extra circuit energy consumptions at relay nodes
  - Depending on the location of relay node

2-D 2-Hop Relay Scenario

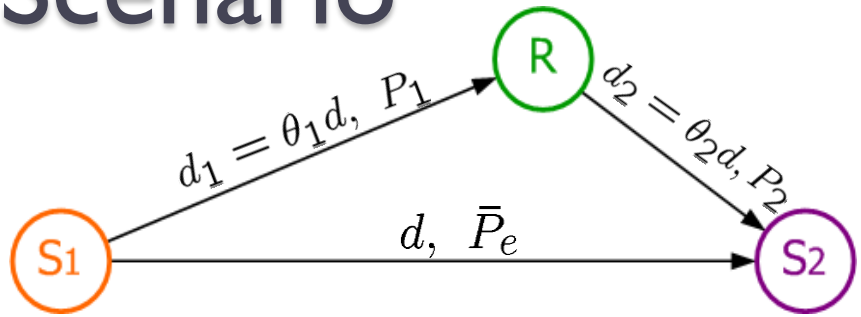

- Source S_1, destination S_2, relay R
  - Direct link S1-S2: d
  - 2-hop relay link S_1-R-S_2, employing *Decode-and-Forward* (DF) Protocol
    - S1-RD: $d_1 = \theta_1 d$
    - RF-S2: $d_2 = \theta_2 d$

  2-D arbitrary position: $\theta_1, \theta_2 > 0\ ,\ \theta_1 + \theta_2 \geq 1$
- Performance constraint: average BER $\bar{P}_e$
- Rayleigh fading channel with K-th power path loss
  - BPSK with coherent detection at high SNR: $P_e = N_0/(4\mathcal{E}_r)$
  - Tx-Rx bit energy relationship: $\mathcal{E}_t/\mathcal{E}_r = M_l G_1 d^K$

M_l - Link margin, G_1 - Gain factor at $d = 1$, $K \geq 2$ - Path loss exponent

Total BEC over Rayleigh Channel

$$P_e = N_0/(4\mathcal{E}_r)$$
$$\mathcal{E}_t/\mathcal{E}_r = M_l G_1 d^K$$

- Total BEC of direct transmission S_1-S_2

$$\mathcal{E}_{\mathrm{d}} = L_2 \frac{d^{2K}}{\bar{P}_e^2} + L_1 \frac{d^K}{\bar{P}_e} + L_0$$

- Total BEC of relaying transmission S_1-RD + RF-S_2
  - Performance constraint at high SNR:

$$\bar{P}_e = 1-(1-P_1)(1-P_2) = P_1 + P_2 - P_1 P_2 \approx P_1 + P_2$$

$$\Leftrightarrow \; P_2 = \bar{P}_e - P_1 \quad \text{and } 0 < P_1 < \bar{P}_e$$

  - Total BEC as superposition of two consecutive direct links:

$$\begin{aligned}\mathcal{E}_{\mathrm{r},P_1} &= \mathcal{E}_1(d_1) + \mathcal{E}_2(d_2) \\ &= L_2\left(\frac{d_1^{2K}}{P_1^2} + \frac{d_2^{2K}}{(\bar{P}_e - P_1)^2}\right) + L_1\left(\frac{d_1^K}{P_1} + \frac{d_2^K}{\bar{P}_e - P_1}\right) + 2L_0\end{aligned}$$

Doubled distance-independent Tx/Rx circuit consumption…

Energy allocation optimization!

Optimum Energy Allocation

- Optimization problem formulation
  - Energy allocation amounts to BER assignment, i.e.,

$$\mathcal{E}_{\mathrm{r}} = \min_{P_1} \ \mathcal{E}_{\mathrm{r},P_1}, \ \text{subject to } 0 < P_1 < \bar{P}_e$$

- Optimum solution: $\dfrac{\partial \mathcal{E}_{\mathrm{r},P_1}}{\partial P_1} = 0$ giving rise to a quartic equation of P_1

$$\begin{aligned}
&\left(L_1 d_1^K - L_1 d_2^K\right) P_1^4 \\
&+ \left(2L_2 d_1^{2K} + 2L_2 d_2^{2K} - 3L_1 d_1^K \bar{P}_e + L_1 d_2^K \bar{P}_e\right) P_1^3 \\
&+ \left(-6L_2 d_1^{2K} \bar{P}_e + 3L_1 d_1^K \bar{P}_e^2\right) P_1^2 \\
&+ \left(6L_2 d_1^{2K} \bar{P}_e^2 - L_1 d_1^K \bar{P}_e^3\right) P_1 \\
&+ \left(-2L_2 d_1^{2K} \bar{P}_e^3\right) = 0
\end{aligned}$$

✓ Quartic eq. is exactly solvable

✗ Root expressions are too complicated to evaluate

✗ Hard to obtain the optimum

Suboptimal Energy Allocation

- Suboptimum solution: discard the 2nd order term in BEC formula
  - 1st order BEC: $\mathcal{E}^1_{\mathrm{r},P_1} = L_1\left(\frac{d_1^K}{P_1} + \frac{d_2^K}{\bar{P}_e - P_1}\right) + 2L_0$
  - Taking derivative with P_1 and setting to 0:

$$\left(d_2^K - d_1^K\right) P_1^2 + 2d_1^K \bar{P}_e P_1 - d_1^K \bar{P}_e^2 = 0$$

  - Quadratic eq. of P_1
  - Related only to d_2/d_1 and BER constraint $\bar{P}_e$
  - Always has a single positive root:

$$P_1^{\mathrm{SO}} = \frac{1}{\left(\frac{\theta_2}{\theta_1}\right)^{\frac{K}{2}} + 1}\bar{P}_e\,, \quad P_2^{\mathrm{SO}} = \bar{P}_e - P_1^{\mathrm{SO}} = \frac{\left(\frac{\theta_2}{\theta_1}\right)^{\frac{K}{2}}}{\left(\frac{\theta_2}{\theta_1}\right)^{\frac{K}{2}} + 1}\bar{P}_e$$

$$\Rightarrow \quad \mathcal{E}_{\mathrm{r}} = \frac{L_2}{\bar{P}_e^2}\left(\theta_1^{\frac{K}{2}} + \theta_2^{\frac{K}{2}}\right)^2 \left(\theta_1^K + \theta_2^K\right) d^{2K} + \frac{L_1}{\bar{P}_e}\left(\theta_1^{\frac{K}{2}} + \theta_2^{\frac{K}{2}}\right)^2 d^K + 2L_0$$

Optimal and Sub-Optimal Allocation

$$\bar{P}_e = 10^{-3}\ ,\ d_2 = 200\text{m}$$

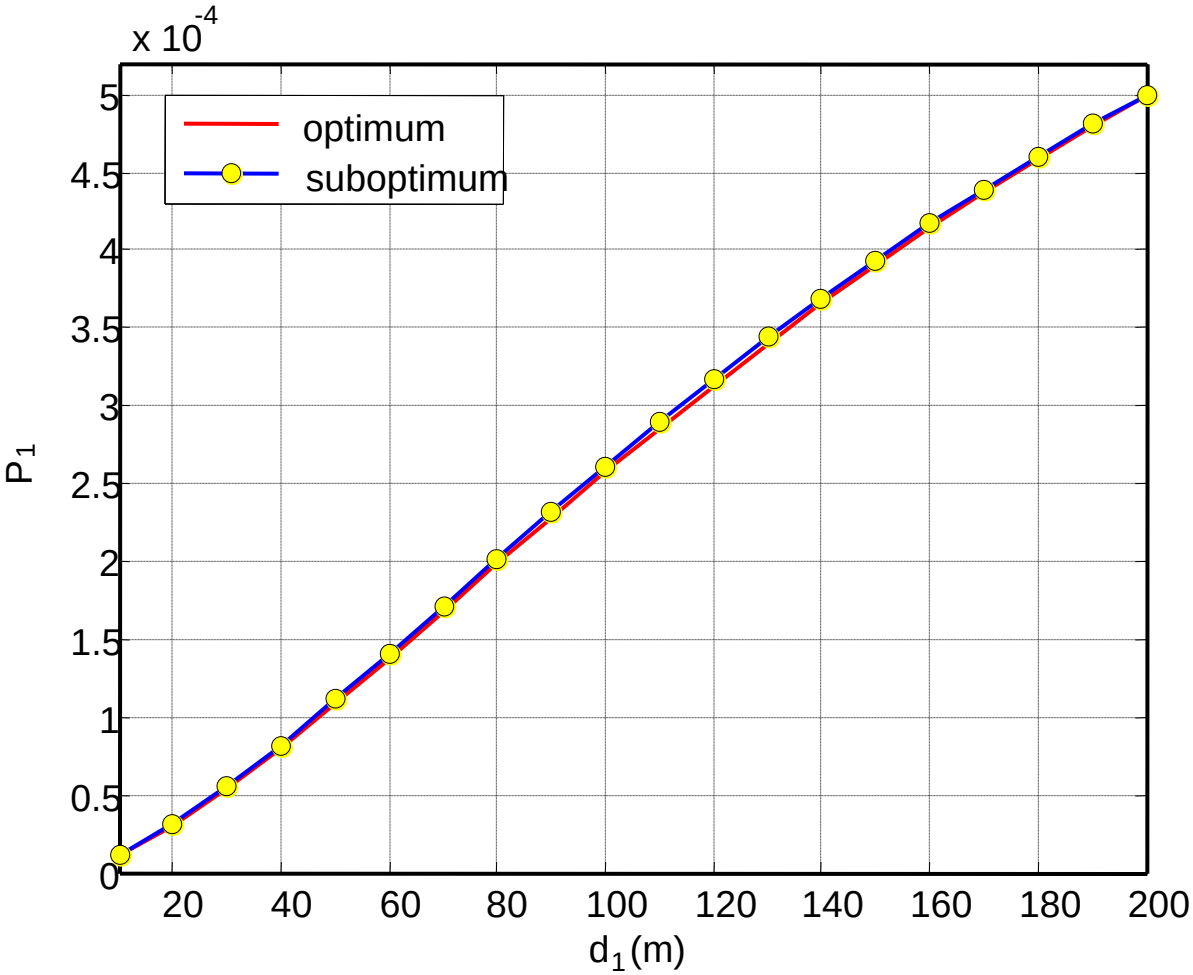

Relay Selection Criterion

- Idea: $\Delta\mathcal{E} \triangleq \mathcal{E}_{\mathrm{d}} - \mathcal{E}_{\mathrm{r}}$, sign tells the more efficient one

$$\Delta\mathcal{E} = \frac{L_2}{\bar{P}_e^2}\left(1-\left(\theta_1^{\frac{K}{2}}+\theta_2^{\frac{K}{2}}\right)^2\left(\theta_1^K+\theta_2^K\right)\right)\left(d^K\right)^2+\frac{L_1}{\bar{P}_e}\left(1-\left(\theta_1^{\frac{K}{2}}+\theta_2^{\frac{K}{2}}\right)^2\right)d^K - L_0$$

Proposition 2: *For a relay node with distances* $\theta_1 d$ *and* $\theta_2 d$ *apart from the primary nodes, choose direct link if* $\Delta\mathcal{E} < 0$ *, otherwise, choose relay link.*

Numerical Results

$d = 100$ m

$d = 150$ m

$d = 200$ m

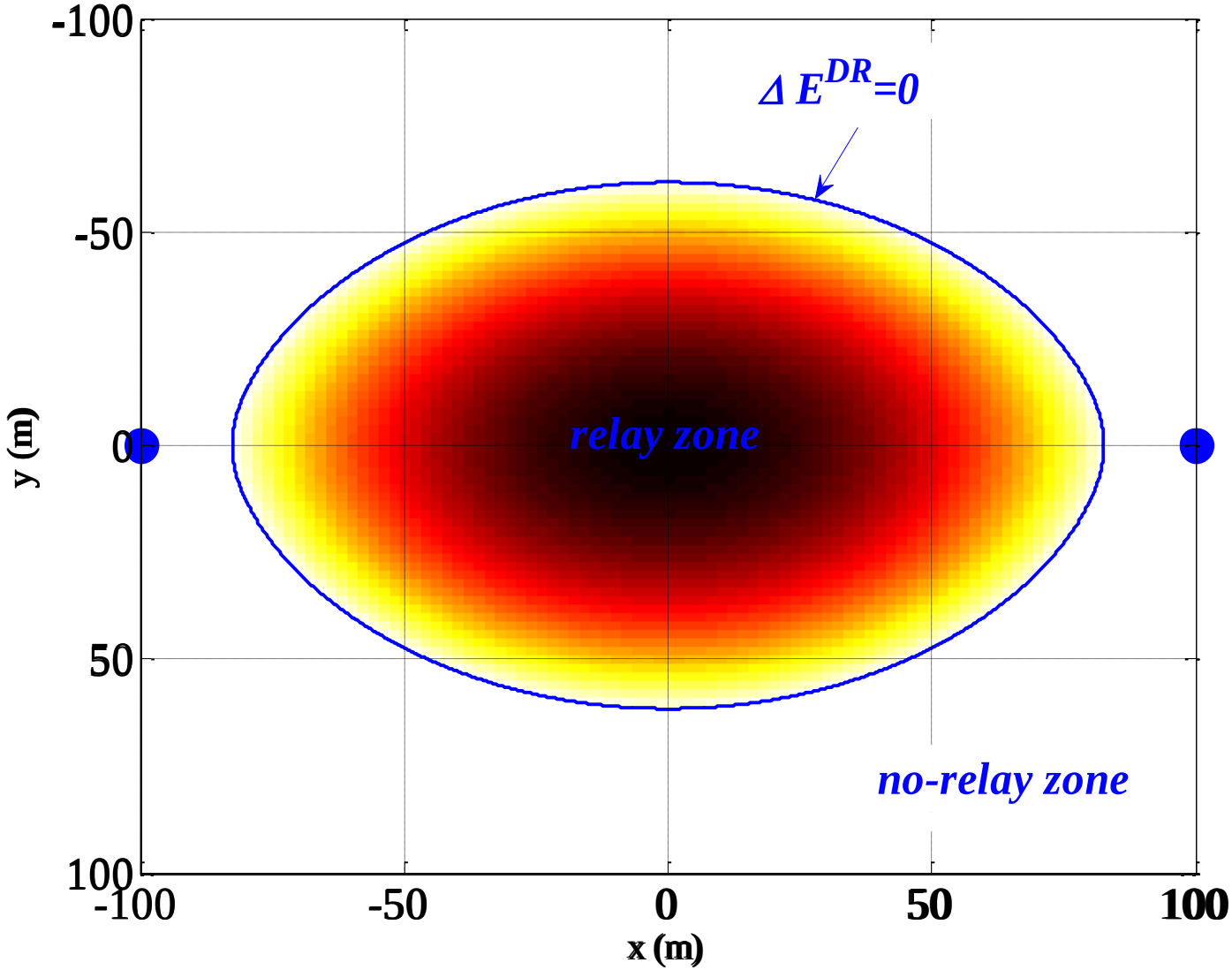

Larger d, bigger relay zone, more battery energy saved

Roadmap

- Introduction: Smart Grid and Situational Awareness
- Green Communications for Sensor Networks
  - Modulation Selection
  - Cooperative Relay Section
- Cognitive Radio for Bandwidth Reutilization
  - Non-Cooperative Spectrum Sensing (NCoS)
  - Cooperative Spectrum Sensing with Soft Information Fusion (SCoS)
  - Cooperative Spectrum Sensing with Hard Information Fusion (HCoS)
- Phasor State Estimation with Bad Data Processing
  - Equivalence between Bad Data Subtraction and Removal
  - Algorithms for Bad Data Processing
- Summary and Future Work

Wireless Comm.: Spectrum Scarcity

- Better QoS ⇒ more bandwidth ⇒ spectrum reutilization

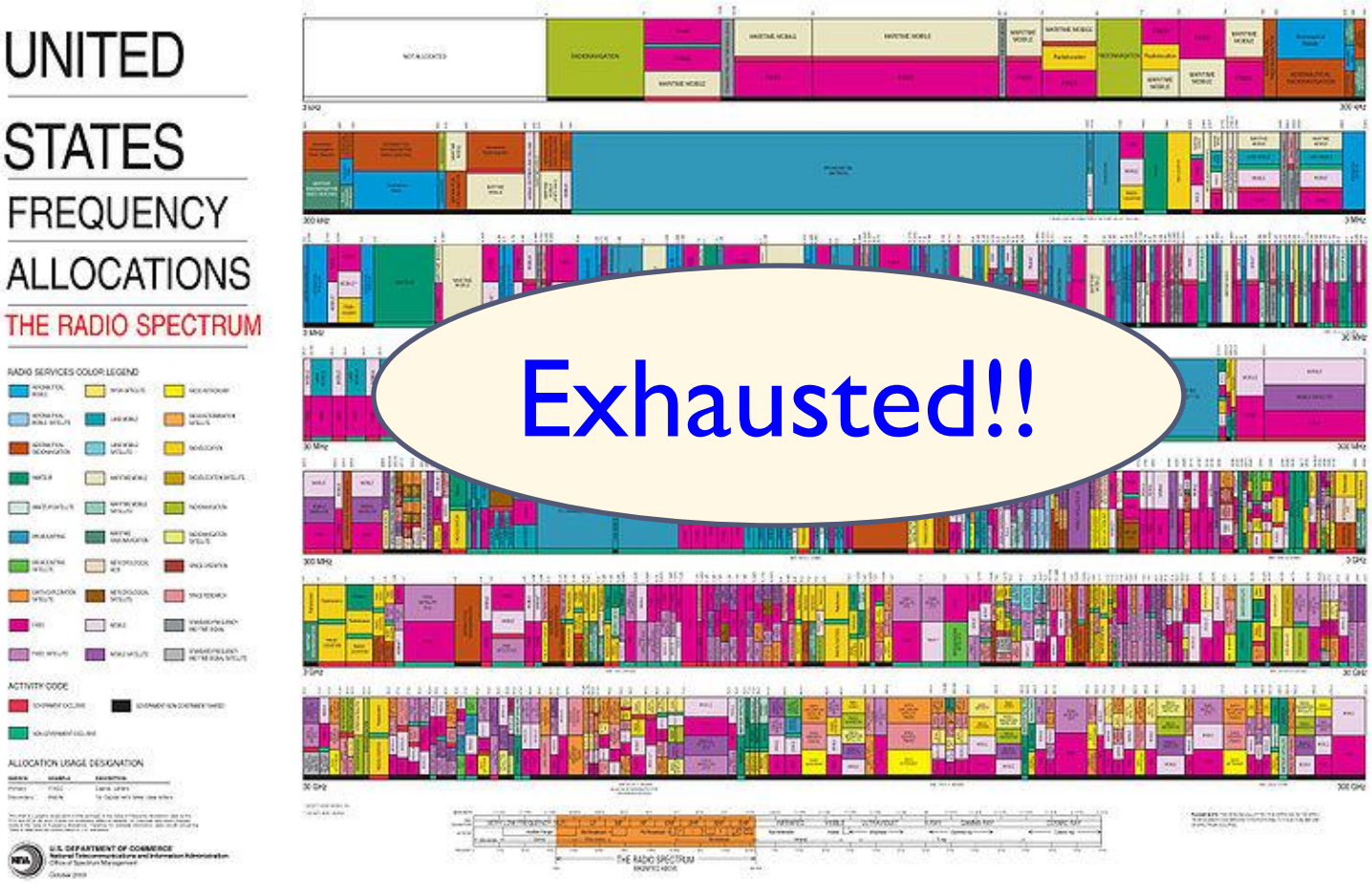

Performance Measures in Cooperative Spectrum Sensing

- The basic performance measures and their physical interpretations:
  - Reliability: the ability to detect band in use

    $\Rightarrow$ **missed detection** $\downarrow$
  - Efficiency: the ability to utilize white band

    $\Rightarrow$ **false alarm** $\downarrow$
- The gain of cooperative spectrum sensing:
  - How to ***quantify*** the cooperative gain?
  - What is the bound on this gain?
  - How to achieve?

Problem Formulation

- Binary hypothesis test between:

  H_0: absence of primary user H_1: presence of primary user
- Rayleigh fading channel and Gaussian noise
- Average SNR information available at sensing nodes

$$r|H_0 = n \sim \mathcal{CN}(0, \sigma_n^2)$$
$$r|H_1 = hx + n \sim \mathcal{CN}(0, E_x\sigma_h^2 + \sigma_n^2)$$

r : sensed signal;

n : additive white Gaussian noise (AWGN);

σ_n^2 : noise variance;

E_x : energy of primary signal;

σ_h^2 : channel variance.

After normalization:

$$r|H_0 = n \sim \mathcal{CN}(0, 1)$$
$$r|H_1 = hx + n \sim \mathcal{CN}(0, \gamma + 1) \qquad \gamma = \frac{E_x\sigma_h^2}{\sigma_n^2}$$

System Model: Basic Sensing Strategies

- Non-cooperative sensing (NCoS)
- Cooperative sensing with soft information fusion (SCoS)

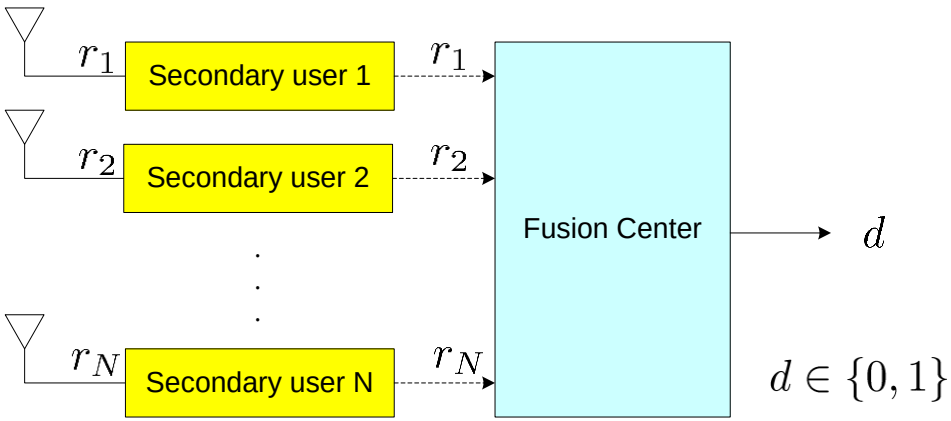

- Cooperative sensing with hard information fusion (HCoS)

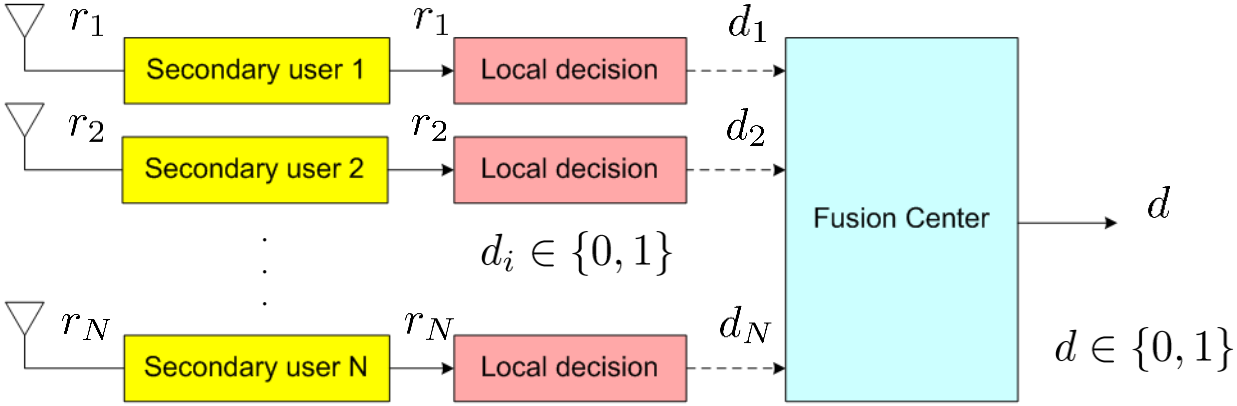

Performance Metric: Diversity

- Performance metrics:
  - False alarm (FA) probability: P_f
  - Missed detection (MD) probability: P_{md}
  - Average detection error probability: $P_e = P_{H_0} P_f + P_{H_1} P_{md}$
- Diversity:

$$d_* = -\lim_{\gamma \to +\infty} \frac{\log P_*}{\log \gamma}$$

d_f : false alarm diversity

d_{md} : missed detection diversity

d_e : detection error diversity

$$\Rightarrow d_e = \min(d_f, d_{md})$$

Non-Cooperative Sensing (NCoS)

- The binary hypothesis testing problem:

$$r|H_0 = n \sim \mathcal{CN}(0,1)$$
$$r|H_1 = hx + n \sim \mathcal{CN}(0,\gamma+1)$$

- Neyman-Pearson (NP) test:

Energy Detector: $\lambda = |r|^2 \gtrless_{H_0}^{H_1} \eta$

- Corresponding false alarm and missed detection probabilities:

$$P_f(\eta,\gamma) = P(\lambda > \eta|H_0) = e^{-\eta}$$
$$P_{md}(\eta,\gamma) = P(\lambda < \eta|H_1) = 1 - e^{-\frac{\eta}{\gamma+1}}$$

- Minimizing the average error probability P_e :

$$\eta^o = (1 + \frac{1}{\gamma})\log(1+\gamma)$$

NCoS: Diversity

With $\eta^o = (1 + \frac{1}{\gamma}) \log(1 + \gamma)$,

$$P_f(\gamma) \sim (1+\gamma)^{-1} \Rightarrow d_f = -\lim_{\gamma \to +\infty} \frac{\log P_f}{\log \gamma} = 1$$

$$P_{md}(\gamma) \sim \gamma^{-1} \log(\gamma + 1) \Rightarrow d_{md} = -\lim_{\gamma \to +\infty} \frac{\log P_{md}}{\log \gamma} = 1$$

$$\Rightarrow \quad d_e = \min(d_f, d_{md}) = 1$$

Theorem 1: *For non-cooperative sensing (NCoS):*

- *The threshold minimizing the average error probability is:*

$$\eta^o = (1 + \frac{1}{\gamma}) \log(1 + \gamma)$$

- *With this threshold, the diversity orders are:*

$$d_f = d_{md} = d_e = 1.$$

NCoS: Diversity

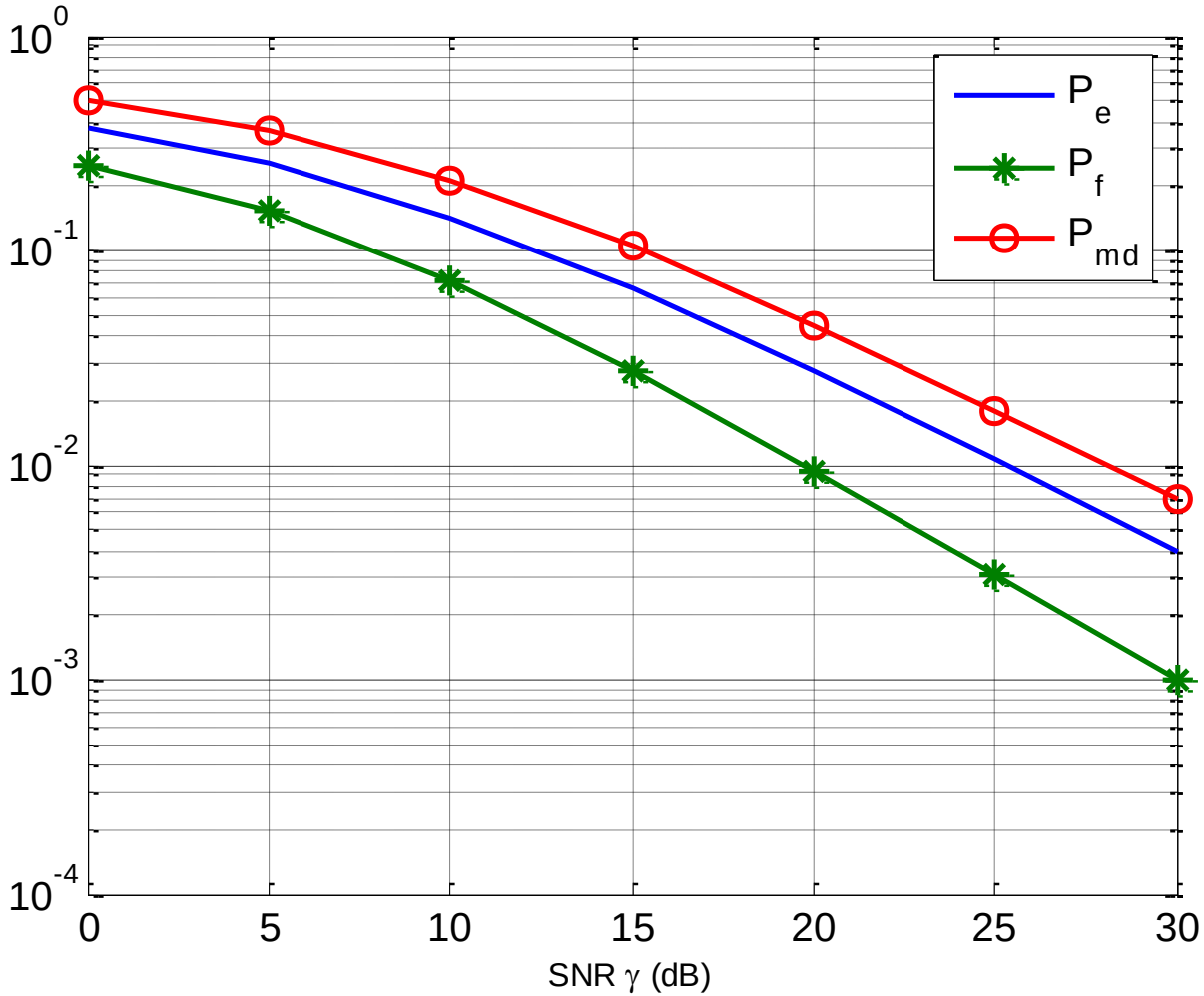

Tradeoff: FA Diversity vs MD SNR

$$P_f(\eta,\gamma) = P(\lambda > \eta | H_0) = e^{-\eta}$$
$$P_{md}(\eta,\gamma) = P(\lambda < \eta | H_1) = 1 - e^{-\frac{\eta}{\gamma+1}}$$

- Threshold at: $\eta^o = (1+\frac{1}{\gamma})\log(1+\gamma)$

$$P_f(\gamma) \sim (1+\gamma)^{-1}$$
$$P_{md}(\gamma) \sim \gamma^{-1}\log(\gamma+1)$$

- Threshold at: $\eta' = d_0\eta^o$

$$P_f(\gamma) \sim (1+\gamma)^{-d_0}$$
$$P_{md}(\gamma) \sim (\gamma/d_0)^{-1}\log(\gamma+1)$$

- The false alarm diversity: $1 \rightarrow d_0$
- The missed detection probability: $-10\log d_0$ dB SNR gain

FA Diversity – MD SNR Tradeoff

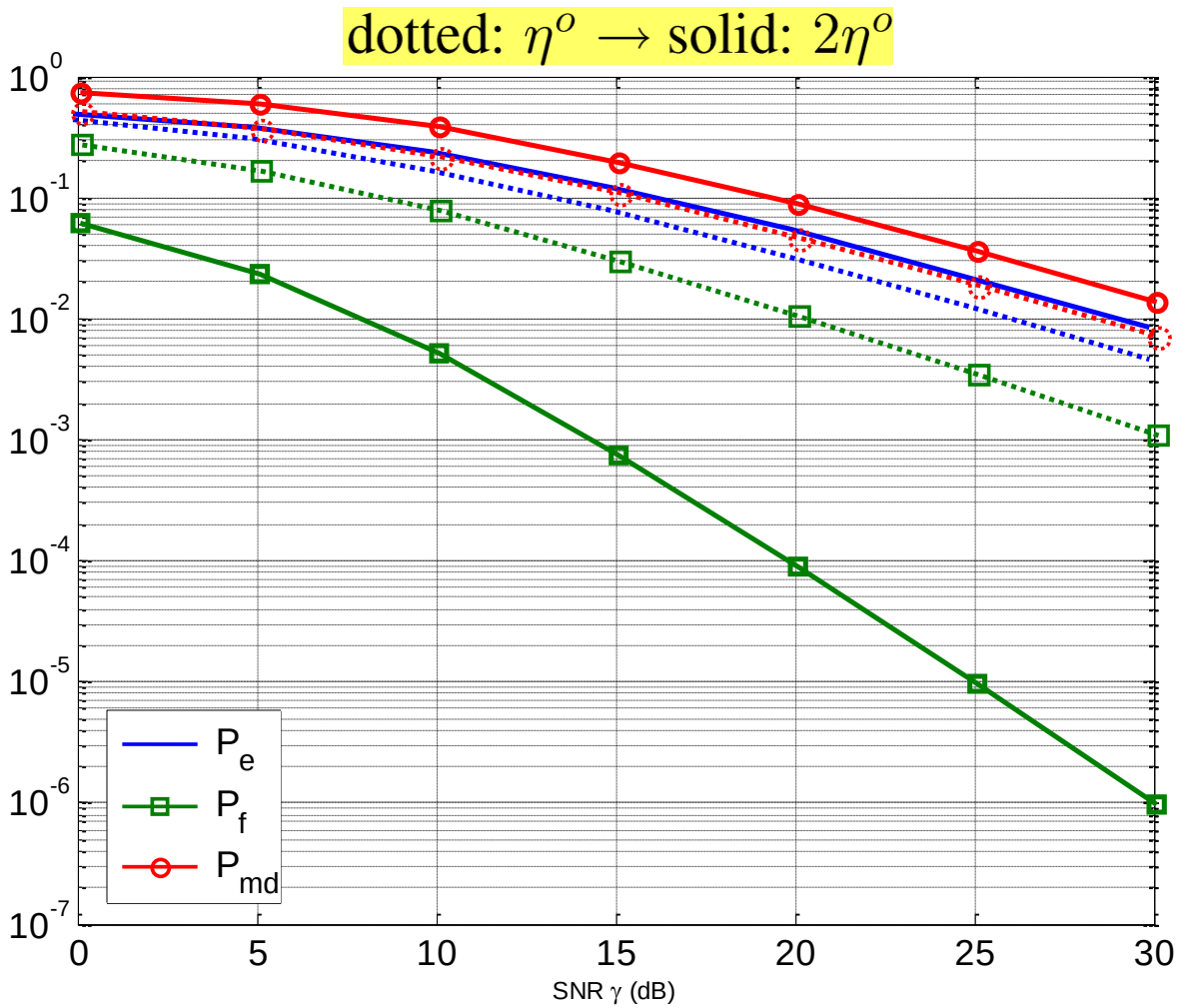

3 dB SNR loss

Diversity increase:

1 → 2

$$d'_f = d_0 = 2,\ d'_{md} = 1,\ d'_e = \min(d'_f, d'_{md}) = 1$$

Cooperative Sensing with Soft Information Fusion (SCoS)

- The binary hypothesis testing problem:

$$r_i|H_0 = n_i \sim \mathcal{CN}(0,1), i = 1,\ldots,N$$
$$r_i|H_1 = h_i x + n_i \sim \mathcal{CN}(0,\gamma+1), i = 1,\ldots,N$$

- Neyman-Pearson (NP) test:

Energy Detector: $\lambda = \sum_{i=1}^{N} |r_i|^2 \gtrless_{H_0}^{H_1} \eta_s$

- Corresponding error probabilities:

$$P_{f,s} = \int_{\eta_s}^{+\infty} f(\lambda_s|H_0)d\lambda_s = \left(\sum_{i=0}^{N-1} \frac{\eta_s^i}{i!}\right) e^{-\eta_s}$$
$$P_{md,s} = \int_{0}^{\eta_s} f(\lambda_s|H_1)d\lambda_s = \left(\sum_{i=N}^{+\infty} \frac{\eta_s^i}{i!(\gamma+1)^i}\right) e^{-\frac{\eta_s}{\gamma+1}}$$

- Minimizing the average error probability:

$$\eta_s^o = N(1+\frac{1}{\gamma})\log(1+\gamma) = N\eta^o$$

SCoS: Diversity

With $\eta_s^o = N(1+\frac{1}{\gamma})\log(1+\gamma)$,

$$P_{f,s}(\gamma) \sim (1+\gamma)^{-N} \Rightarrow d_{f,s} = -\lim_{\gamma\to+\infty}\frac{\log P_{f,s}}{\log\gamma} = N$$

$$P_{md,s}(\gamma) \sim (\gamma/N)^{-N}(\log(\gamma+1))^N \Rightarrow d_{md,s} = -\lim_{\gamma\to+\infty}\frac{\log P_{md,s}}{\log\gamma} = N$$

$$\Rightarrow d_{e,s} = \min(d_{f,s}, d_{md,s}) = N$$

Theorem 2: *For cooperative sensing with soft information fusion (SCoS):*

- *The threshold minimizing the average error probability is:*

$$\eta_s^o = N(1+\frac{1}{\gamma})\log(1+\gamma) = N\eta^o$$

- *With this threshold, the diversity orders are:*

$$d_{f,s} = d_{md,s} = d_{e,s} = N.$$

SCoS: Diversity

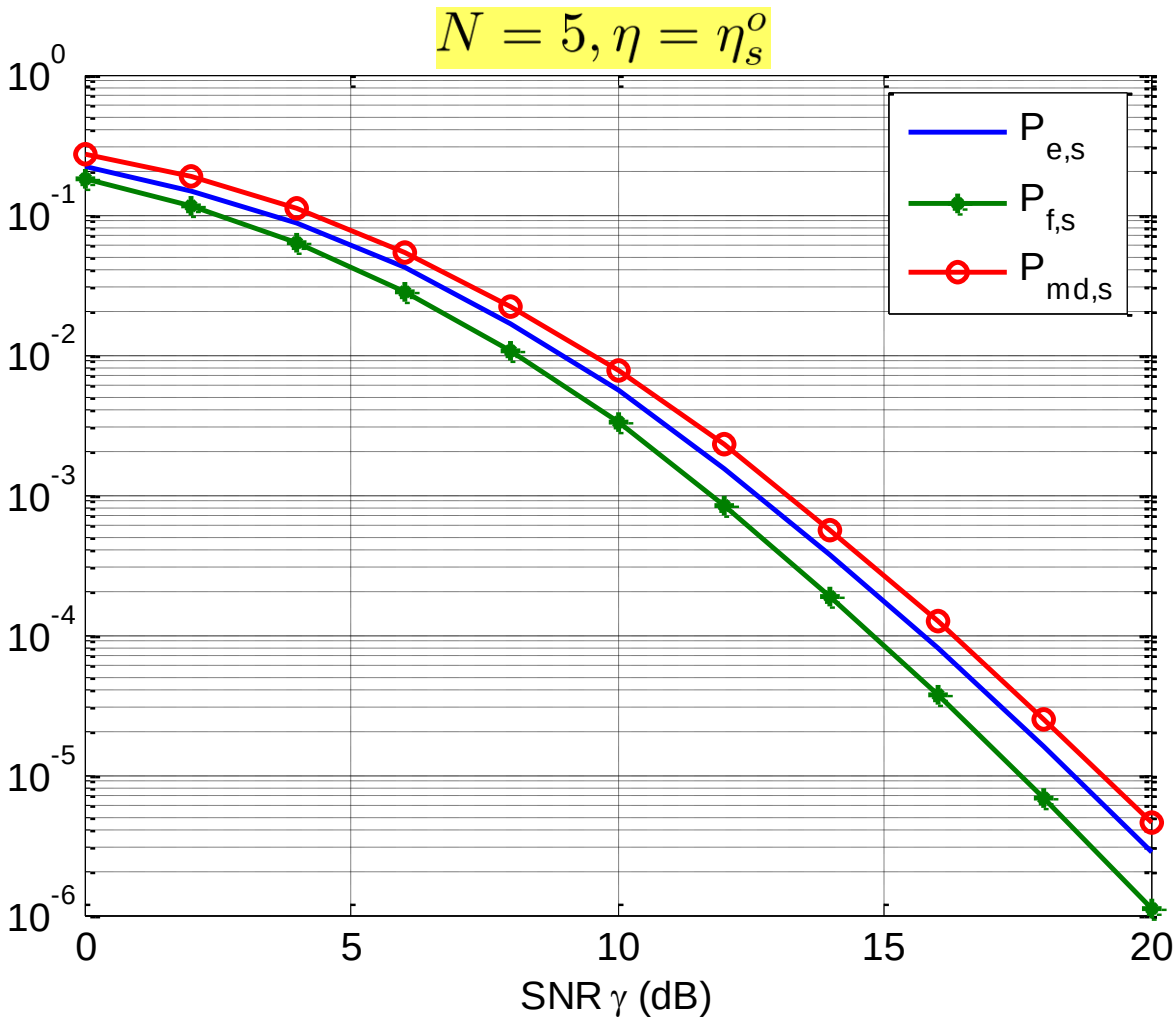

Tradeoff : FA Diversity vs MD SNR

- Threshold at: $\eta_s^o = N\eta^o$

$$P_f(\gamma) \sim (1+\gamma)^{-N}$$

$$P_{md}(\gamma) \sim (\gamma/N)^{-N}(\log(\gamma+1))^N$$

- Threshold at: $\eta_s' = d_0\eta^o$

$$P_f(\gamma) \sim (1+\gamma)^{-d_0}$$

$$P_{md}(\gamma) \sim (\gamma/d_0)^{-N}(\log(\gamma+1))^N$$

- The false alarm diversity: $N \rightarrow d_0$
- The missed detection probability: $-10\log(d_0/N)$ dB SNR gain

FA diversity – MD SNR Tradeoff

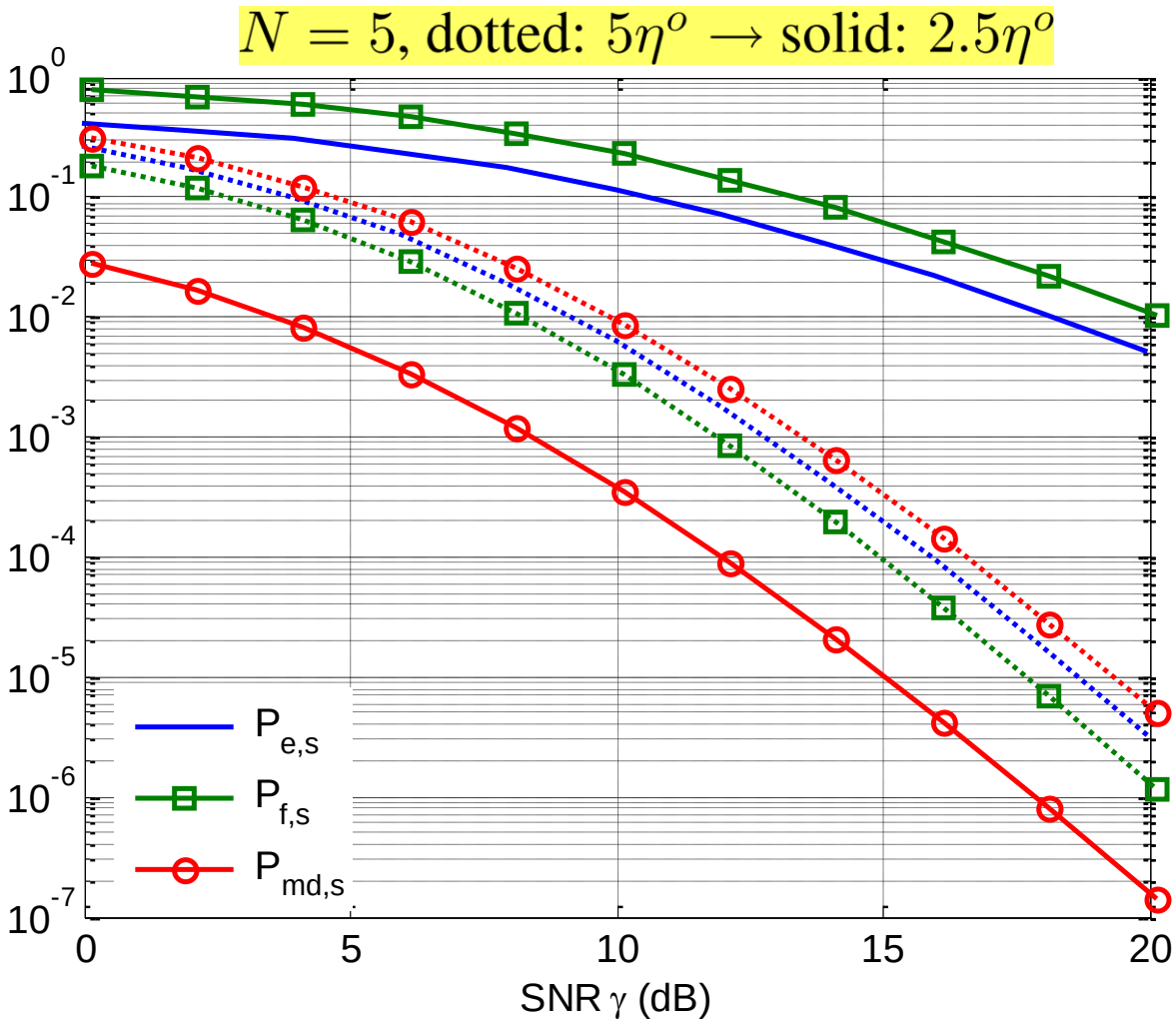

Diversity decrease:

5 → 2.5

3 dB SNR gain

$$d'_f = d_0 = 2.5,\ d'_{md} = 5,\ d'_e = \min(d'_f, d'_{md}) = 2.5$$

Cooperative Sensing with Hard Information Fusion (HCoS)

- The binary hypothesis testing problem:

$$d_i|H_0 \sim \text{Bernoulli}(1-P_{f,l}, P_{f,l}), i=1,\ldots,N$$
$$d_i|H_1 \sim \text{Bernoulli}(P_{md,l}, 1-P_{md,l}), i=1,\ldots,N$$

$P_{f,l}$ is the false alarm probability for local decision

$P_{md,l}$ is the missed detection probability for local decision

- Neyman-Pearson (NP) test: $\lambda_h = \sum_{i=1}^{N} d_i \underset{<H_0}{\overset{>H_1}{}} \eta_h$
- Corresponding error probabilities:

$$P_{f,h} = \sum_{\lambda_h=\eta_h}^{N} \binom{N}{\lambda_h} P_{f,l}^{\lambda_h} (1-P_{f,l})^{N-\lambda_h}$$
$$P_{md,h} = \sum_{\lambda_h=0}^{\eta_h-1} \binom{N}{\lambda_h} (1-P_{md,l})^{\lambda_h} P_{md,l}^{N-\lambda_h}$$

  - Optimization mathematically intractable
  - User number N required at local user

$\Rightarrow$ Local optimum decision $\eta_l = \eta^o = (1+\frac{1}{\gamma})\log(\gamma+1)$

Diversity Tradeoff

With local optimum threshold, from the result in NCoS, we know that $P_{f,l} \sim \gamma^{-1}$ and $P_{md,l} \sim \gamma^{-1}$, then accordingly:

$$P_{f,h} = \sum_{\lambda_h=\eta_h}^{N} \binom{N}{\lambda_h} P_{f,l}^{\lambda_h} (1-P_{f,l})^{N-\lambda_h} \sim \binom{N}{\eta_h} P_{f,l}^{\eta_h} \sim \gamma^{-\eta_h}$$

$$P_{md,h} = \sum_{\lambda_h=0}^{\eta_h-1} \binom{N}{\lambda_h} (1-P_{md,l})^{\lambda_h} P_{md,l}^{N-\lambda_h} \sim \binom{N}{\eta_h-1} P_{md,l}^{N-(\eta_h-1)} \sim \gamma^{-(N-\eta_h+1)}$$

Theorem 3: *For HCoS, with locally optimum threshold* $\eta_l = (1+\frac{1}{\gamma})\log(1+\gamma)$, *the diversity orders are:*

$$\boxed{d_{f,h} = \eta_h, d_{md,h} = N - \eta_h + 1,} d_{e,h} = \min(\eta_h, N - \eta_h + 1)$$

Tradeoff in Diversities!

Diversity Tradeoff

Solid: $\eta_h = 1$; Dotted: $\eta_h = 2$

$$d_{f,h} = \eta_h$$

$$d_{md,h} = N - \eta_h + 1$$

$$d_{e,h} = \min\left(d_{f,h}, d_{md,h}\right)$$

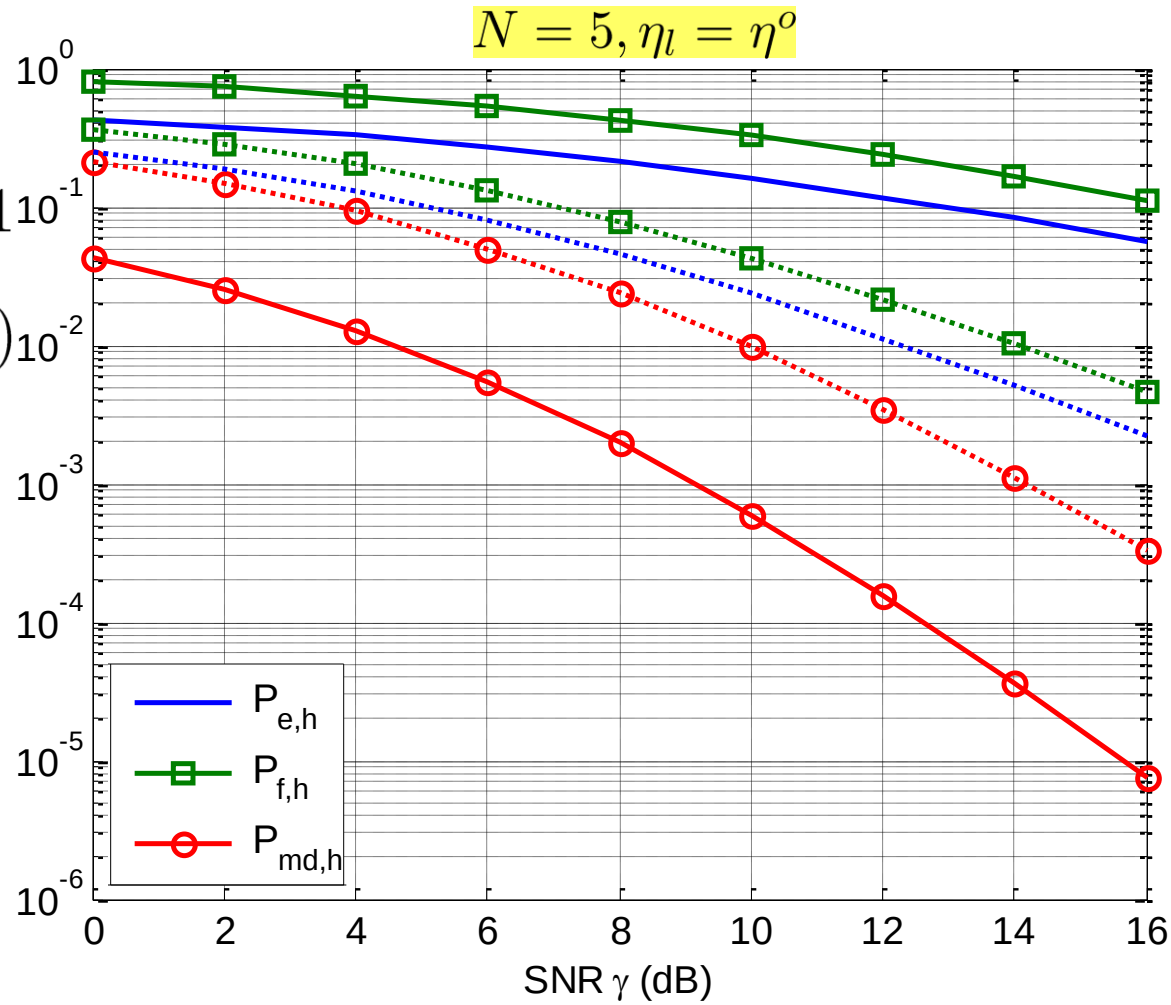

HCoS-1: Unknown N

If one wants to optimize the diversity of the average error probability, then $\eta_h^o = \arg\max_{\eta_h} \min(\eta_h, N - \eta_h + 1)$.

Accordingly, we have Corollary 1.

Corollary 1: *For HCoS, with locally optimum decision with threshold* $\eta_l = (1 + \frac{1}{\gamma}) \log(1 + \gamma)$ *, the optimum threshold at the fusion center to maximize the detection error diversity is:* $\eta_h^o = \lfloor \frac{N+1}{2} \rfloor$ or $\eta_h^o = \lceil \frac{N+1}{2} \rceil$, *with* $d_{e,h} = \lfloor \frac{N+1}{2} \rfloor$

Majority Rule!

Diversity Loss! (about half)

HCoS-1: Unknown N

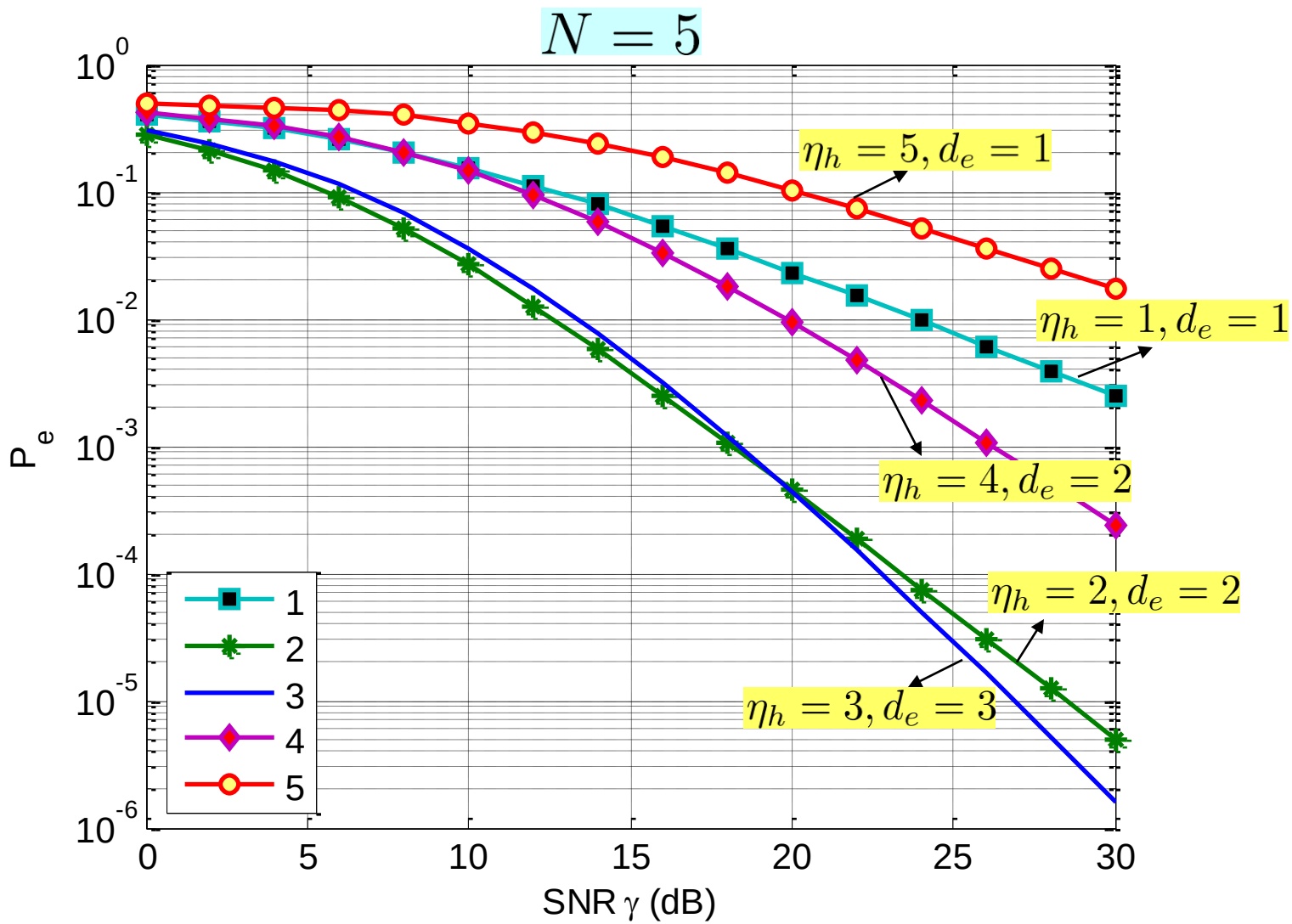

HCoS-N: Known N

- For local decision: $\eta_l = \eta^o \rightarrow \eta_l' = N\eta^o$
  - The local false alarm diversity: $1 \rightarrow N$
  - The local missed detection diversity: $1 \rightarrow 1$

Corollary 2: *For HCoS, if:*

- *The local threshold is:* $\eta_l = N\eta^o$
  - $d_{f,h} = N\eta_h, d_{md,h} = N - \eta_h + 1$
  - $d_{e,h} = \min(N\eta_h, N - \eta_h + 1)$
- *Take the fusion center threshold as:* $\eta_h = 1$, *Then all the diversities are maximized to* N

OR-Rule!

Full diversity order achieved thanks to the known number of cooperating users!

HCoS-N: Known N

dotted: soft fusion
solid: hard fusion

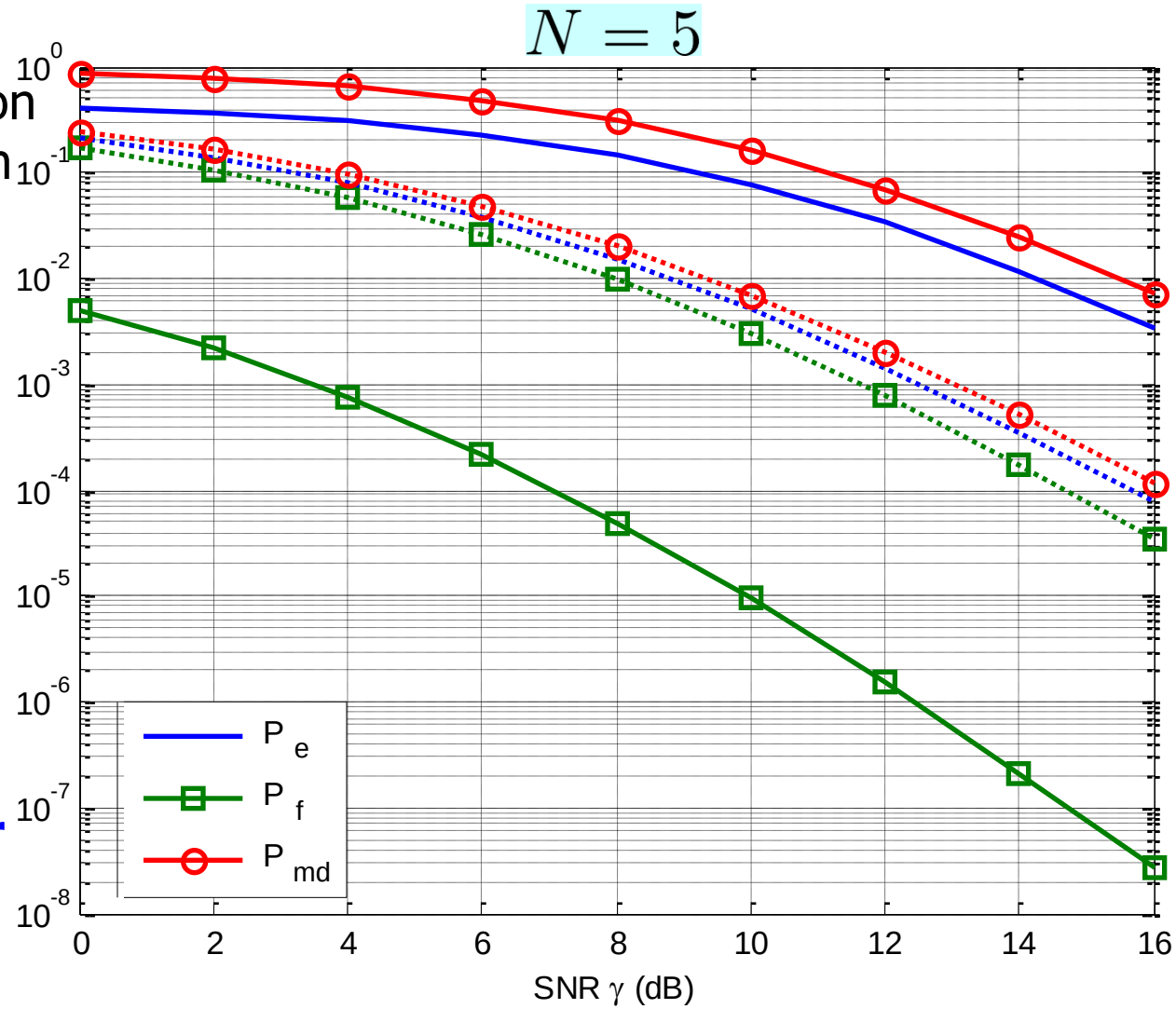

Full diversity, but SNR loss for average detection error and missed detection

Roadmap

- Introduction: Smart Grid and Situational Awareness
- Green Communications for Sensor Networks
  - Modulation Selection
  - Cooperative Relay Section
- Cognitive Radio for Bandwidth Reutilization
  - Non-Cooperative Spectrum Sensing (NCoS)
  - Cooperative Spectrum Sensing with Soft Information Fusion (SCoS)
  - Cooperative Spectrum Sensing with Hard Information Fusion (HCoS)
- Phasor State Estimation with Bad Data Processing
  - Equivalence between Bad Data Subtraction and Removal
  - Algorithms for Bad Data Processing
- Summary and Future Work

Monitoring: State Estimation (SE)

- State: bus voltage phasors
- SE: crucial for energy management system
- Phasor measurement unit (PMU): synchronized measurement

Traditional SE	SE from PMU
Non-synchronized voltage magnitude and active/reactive power measurements	Synchronized voltage and current phasor measurement
Nonlinear model	Linear model
Iterative normal equation solving	Single-step linear equation solving
Limited bad data processing technique	More sophisticated algorithms possible

Signal Model

$$\boldsymbol{m} = \begin{bmatrix} \boldsymbol{m}_v \\ \boldsymbol{m}_i \end{bmatrix} = \begin{bmatrix} \boldsymbol{I} \\ \boldsymbol{Y} \end{bmatrix} \boldsymbol{s} + \boldsymbol{e} = \boldsymbol{H}\boldsymbol{s} + \boldsymbol{b} + \boldsymbol{\eta}$$

- Synchronized voltage measurements: $\boldsymbol{m}_v : p \times 1$
- Synchronized current measurements: $\boldsymbol{m}_i : (q-p) \times 1$
- Admittance matrix: $\boldsymbol{Y} : (q-p) \times p$
  - System topology
  - Transmission line parameters
- State to be Estimated: $\boldsymbol{s} : p \times 1$
  - Bus voltages
- Measurement error:
  1. Bad data: $\boldsymbol{b} : q \times 1$
     - Sparse: $\|\boldsymbol{b}\|_0 \leq k$
  2. Gaussian noise: $\boldsymbol{\eta} : q \times 1$
     - W.L.O.G., assume to be i.i.d.

Bad Data Processing Strategies

Bad data: *location* and *value*

A. Joint estimation of bad data location and values: $\hat{b}$

   then solve: $\boldsymbol{H}\boldsymbol{s} + \boldsymbol{\eta} = \boldsymbol{m} - \hat{\boldsymbol{b}}$

B. Separate: first location estimation: $\mathcal{I}_b = \{i_1, i_2, \ldots, i_k\}$

   a) Estimate the values, then subtraction:
      - Selection matrix: $\boldsymbol{\Theta} = [\boldsymbol{I}(:, i_1), ..., \boldsymbol{I}(:, i_k)]$
      - Modified model: $\boldsymbol{m} = \boldsymbol{H}\boldsymbol{s} + \boldsymbol{\Theta}\boldsymbol{b}_k + \boldsymbol{\eta}$
      - Estimate, then subtraction: $\boldsymbol{m} - \boldsymbol{\Theta}\hat{\boldsymbol{b}}_k = \boldsymbol{H}\boldsymbol{s} + \boldsymbol{\eta}$

   b) Simply removal:
      - Removal matrix: $\boldsymbol{\Theta}_\perp = (\mathrm{null}(\boldsymbol{\Theta}^T))^T$
      - Model with reduced size: $\boldsymbol{\Theta}_\perp \boldsymbol{m} = \boldsymbol{\Theta}_\perp \boldsymbol{H}\boldsymbol{s} + \boldsymbol{\Theta}_\perp \boldsymbol{\eta}$

$$\boldsymbol{\Theta}_\perp \boldsymbol{m} : (q-k) \times 1$$
$$\boldsymbol{\Theta}_\perp \boldsymbol{H} : (q-k) \times p$$

Subtraction and Removal Equivalence

The estimate and then subtraction scheme:

$$m = Hs + \Theta b_k + \eta$$

The property of selection matrix: $\Theta'\Theta = I_k$, thus:

$$\Theta' m = \Theta' Hs + b_k + \Theta'\eta$$

Conditional LS estimate of bad data: $\hat{b}_k(s) = \Theta'(m - Hs)$

The LS estimate of state after subtraction:

$$\hat{s}_S = \arg\min_{\boldsymbol{s}} \|m - \Theta\hat{b}_k(s) - Hs\|^2$$

Within the objective function:

$$m - \Theta\hat{b}_k(s) - Hs = m - \Theta\Theta'(m - Hs) - Hs$$

$$(I - \Theta\Theta')(m - Hs)$$

Subtraction equivalent to removal !

$$= \Theta_\perp\Theta_\perp(m - Hs)$$

Where: $\|\Theta'_\perp\Theta(m - Hs)\|^2 = \|\Theta_\perp m - \Theta_\perp Hs)\|^2$

Also obtainable by oblique projection [Behren-Scharf'94]

Algorithm 1: Largest Residual Removal (LRR) [Phadke-Thorp'10]

- Step 1: initial LS estimate: $\hat{s} = (\boldsymbol{H}'\boldsymbol{H})^{-1}\boldsymbol{H}'\boldsymbol{m}$
- Step 2: residual calculation: $\boldsymbol{r} = \boldsymbol{m} - \boldsymbol{H}\hat{\boldsymbol{s}}$
- Step 3: bad data detection: $\|\boldsymbol{r}\|^2 \geq \chi^2_{1-\alpha,2(q-p)}$?
  - ✗ If no, stop;
  - ✓ If yes,
    - Bad data location identification as the largest residual:

$$\hat{i} = \arg\max \|\boldsymbol{r}(i)\|_2$$

    - Remove the bad data, reduce the model size, go to step 1.

Algorithm 2: Sparsity Regularized Minimization (SRM)

Regularized minimization problem:

$$(\hat{\boldsymbol{s}}, \hat{\boldsymbol{b}}) = \arg\min_{(\boldsymbol{s},\boldsymbol{b})} \left(\|\boldsymbol{m} - \boldsymbol{b} - \boldsymbol{H}\boldsymbol{s}\|_2^2 + \lambda \cdot \mathrm{spar}(\boldsymbol{b}) \right)$$

Conditional LS sate estimate: $\hat{\boldsymbol{s}}(\boldsymbol{b}) = (\boldsymbol{H}'\boldsymbol{H})^{-1}\boldsymbol{H}'(\boldsymbol{m} - \boldsymbol{b})$

Bad data estimate: $\hat{\boldsymbol{b}} = \arg\min_{\boldsymbol{b}} \left(\|\boldsymbol{P}_H^{\perp}(\boldsymbol{b} - \boldsymbol{m})\|_2^2 + \lambda\, \mathrm{spar}(\boldsymbol{b}) \right)$

$$= \arg\min_{\boldsymbol{b}} \left(\|\boldsymbol{H}_{\perp}(\boldsymbol{b} - \boldsymbol{m})\|_2^2 + \lambda\, \mathrm{spar}(\boldsymbol{b}) \right)$$

fat matrix

where $\boldsymbol{z} = \boldsymbol{H}_{\perp}\boldsymbol{m}$ can be interpreted as *syndrome*

Formulated as a compressive sensing problem!

Final state estimate: $\hat{\boldsymbol{s}} = (\boldsymbol{H}'\boldsymbol{H})^{-1}\boldsymbol{H}'(\boldsymbol{m} - \hat{\boldsymbol{b}})$

Algorithm 3: Projection and Minimization (PM)

Iteratively remove the bad data similar as LRR

With the objective function in SRM

$$(\hat{\boldsymbol{s}}, \hat{\boldsymbol{b}}) = \arg\min_{(\boldsymbol{s},\boldsymbol{b})} \left(\|\boldsymbol{m} - \boldsymbol{b} - \boldsymbol{H}\boldsymbol{s}\|_2^2 + \lambda \cdot \mathrm{spar}(\boldsymbol{b}) \right)$$

With $\|\boldsymbol{b}\|_0 = 1$, then $\boldsymbol{b} = b\boldsymbol{I}(:, i)$, with syndrome $\boldsymbol{z} = \boldsymbol{H}_\perp \boldsymbol{m}$:

The bad data location can be identified as:

$$(\hat{b}, \hat{i}) = \arg\min_{(b,i)} \|b\boldsymbol{H}_\perp \boldsymbol{I}(:, i) - \boldsymbol{z}\|_2^2 = \arg\min_{(b,i)} \|b\boldsymbol{H}_\perp (:, i) - \boldsymbol{z}\|_2^2$$

Then, remove the i-th measurement from the model. Repeat the initial state estimation and bad data detection.

Simulation Setup [Uni. of Washington, PSTCA]

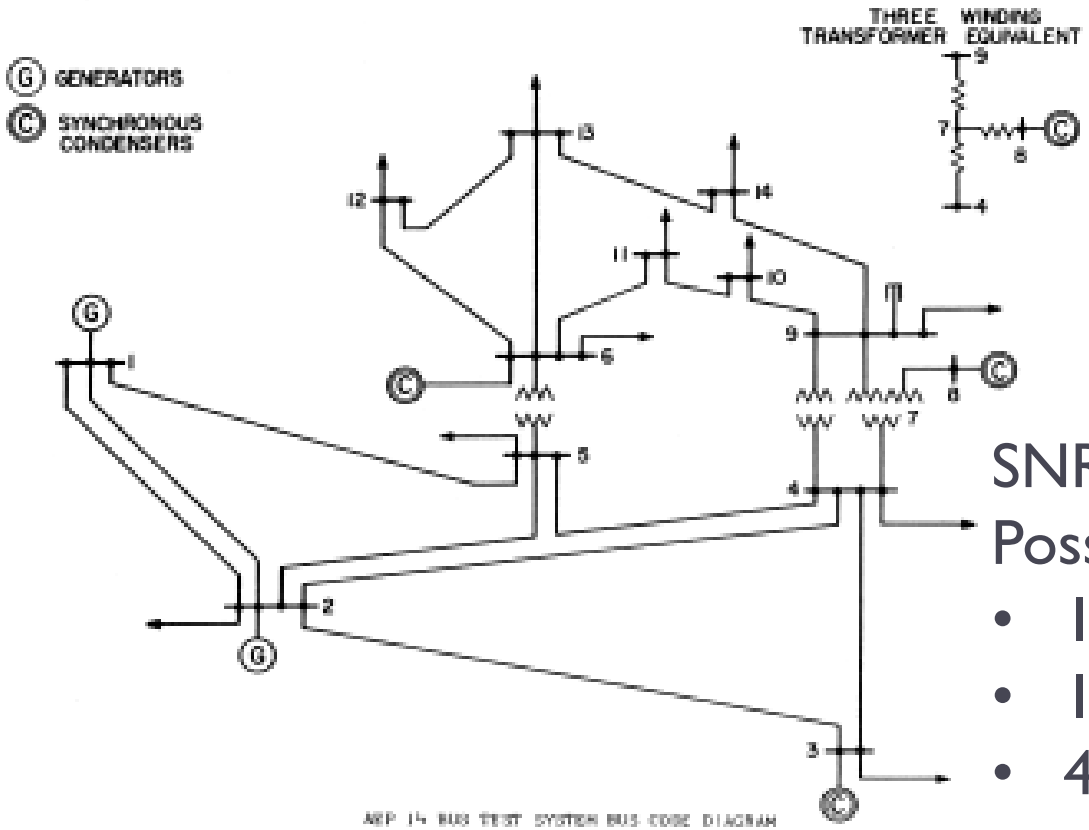

SNR = 20 dB

Possible measurements:

- 14 voltages
- 14 injection currents
- 40 line currents: 20×2

For SRM, the compressive sensing algorithms adopted:

- LASSO: l_1-norm [http://sparselab.standford.edu]
- Approximated l_0-norm minimization [Mohimani-Babaie-Zadeh, et.al'09]

Simulation Results: Partial Redundancy

14 voltages, 14 injection line currents, 1 bad data

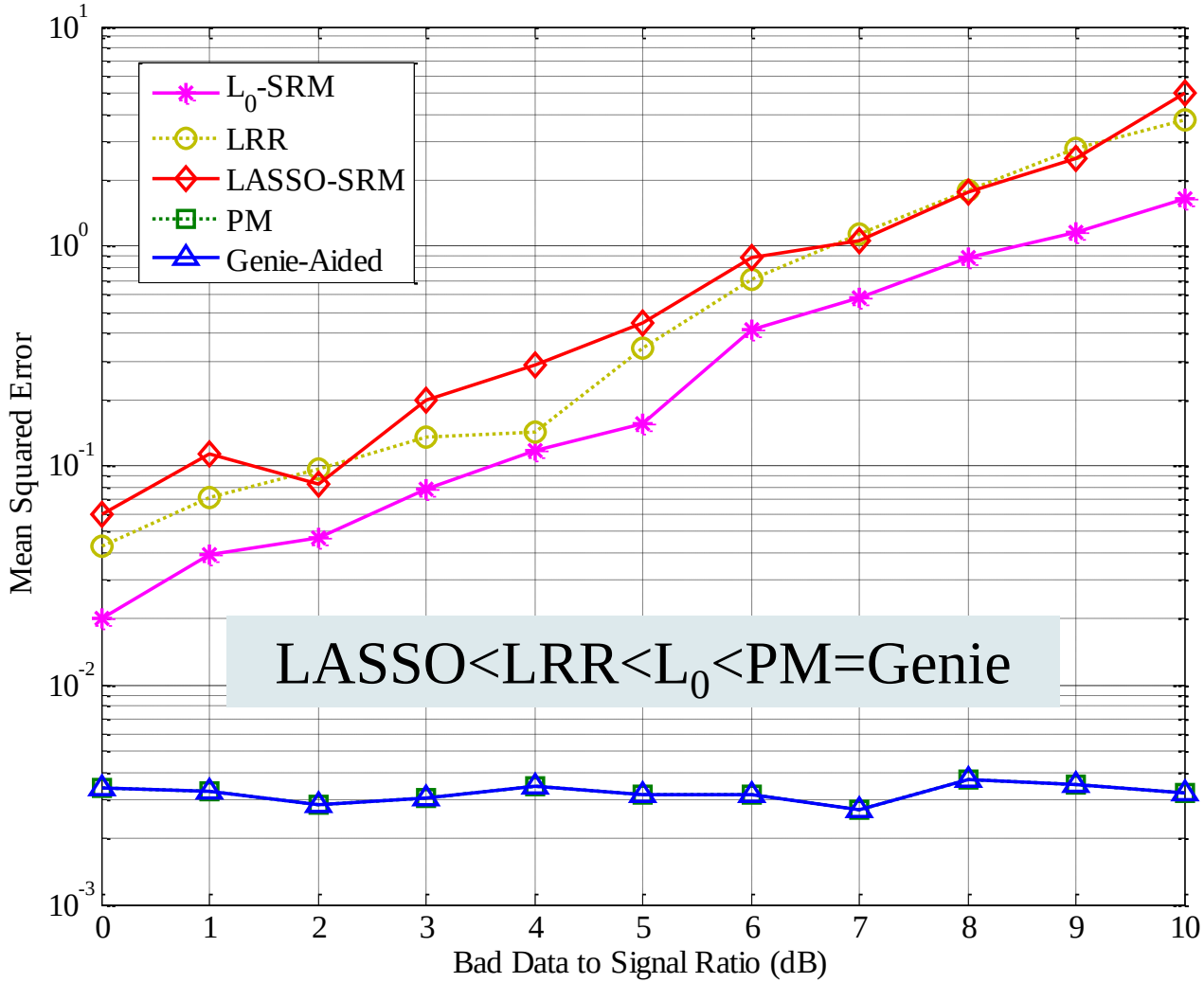

Simulation Results: Partial Redundancy

14 voltages, 14 injection line currents, 3 bad data

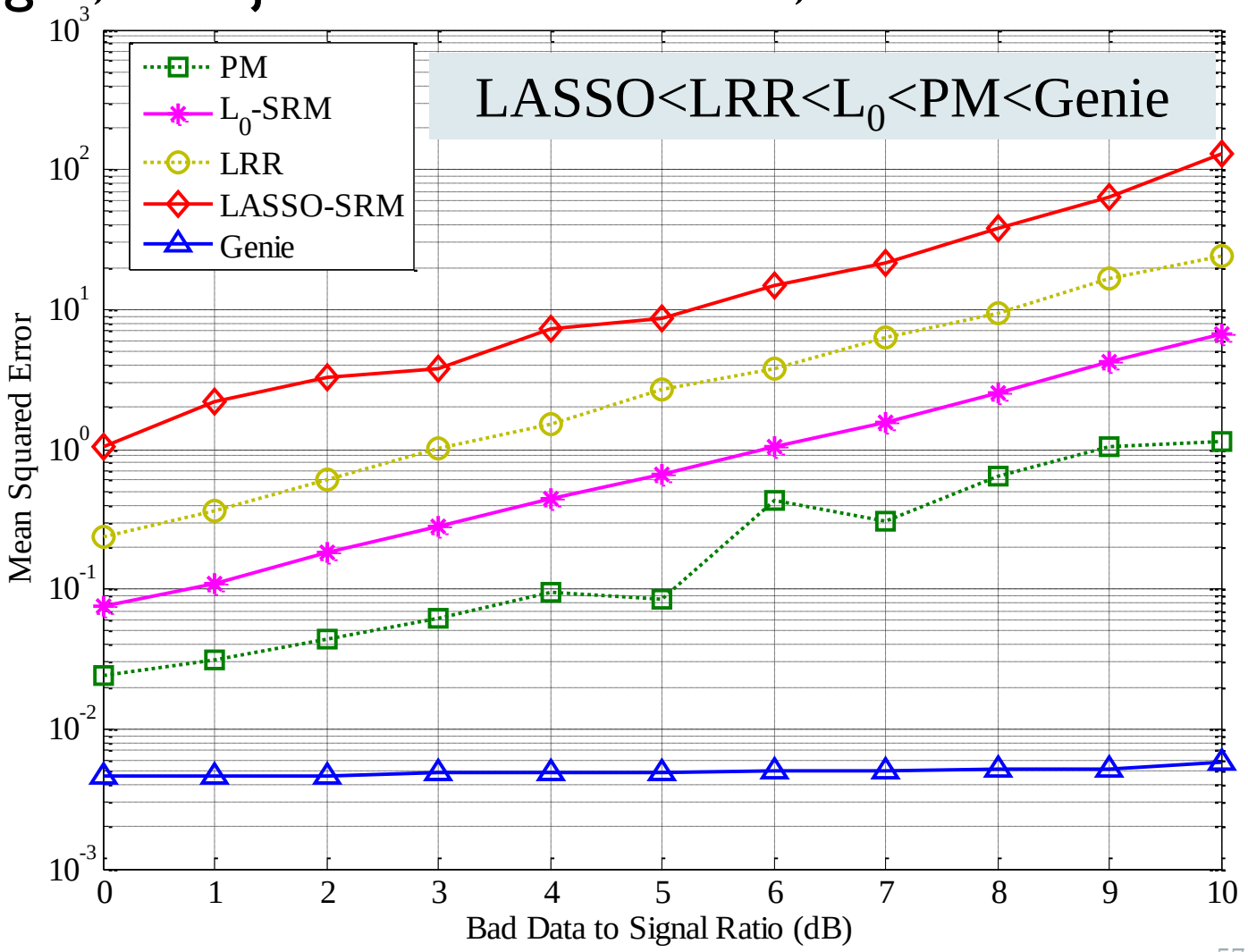

Simulation Results: Full Redundancy

14 voltages, 14 injection line currents, 40 line currents, 4 bad data

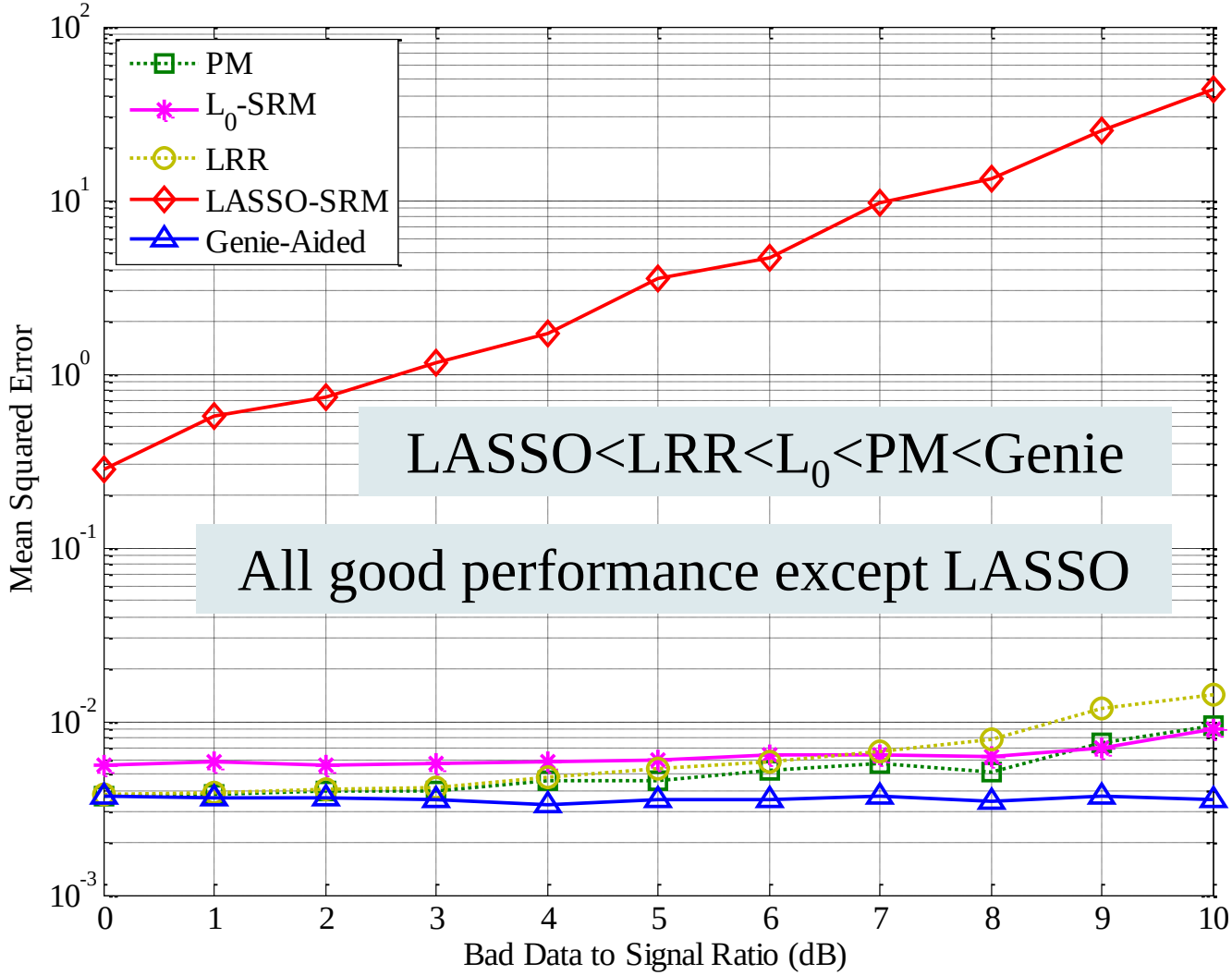

Roadmap

- Introduction: Smart Grid and Situational Awareness
- Green Communications for Sensor Networks
  - Modulation Selection
  - Cooperative Relay Section
- Cognitive Radio for Bandwidth Reutilization
  - Non-Cooperative Spectrum Sensing (NCoS)
  - Cooperative Spectrum Sensing with Soft Information Fusion (SCoS)
  - Cooperative Spectrum Sensing with Hard Information Fusion (HCoS)
- Phasor State Estimation with Bad Data Processing
  - Equivalence between Bad Data Subtraction and Removal
  - Algorithms for Bad Data Processing
- Summary and Future Work

Summary

- Smart grid: an interdisciplinary research area
- The situational awareness:
  - Sensing:
    - Green communications for wireless sensor networks
      - Modulation format
      - Cooperative communication links
  - Communications:
    - Cooperative spectrum sensing for more bandwidth to guarantee QoS
      - SCoS: full diversity, full SNR gain
      - HCoS-1: half diversity
      - HCoS-N: full diversity, but SNR loss
  - Monitoring:
    - Phasor state estimation from PMU measurement with bad data
      - Equivalence between bad data subtraction and removal
      - Bad data processing algorithms

Proposed Future Work 1: multi-bit cooperative spectrum sensing

- Soft CoS: full diversity
- Hard CoS: diversity or SNR loss
  - Reason: 1-bit quantization
- Could more bits help? If so, how?
- One step forward: ternary local decisions

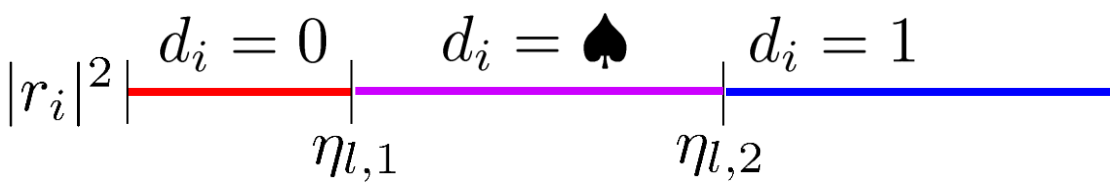

- Issues to be investigated:
  - Local threshold selection
  - Fusion rules
  - Performance analysis
  - Generalization to more bits

Proposed Future Work 2: Parameter and Topology Error Processing

- Current bad data detection – overall residual:

$$\boldsymbol{r} = \boldsymbol{m} - \boldsymbol{H}\hat{\boldsymbol{s}}$$

- Finer preprocessing possible:
  - Voltage-current agreement: $\boldsymbol{m}_i - \boldsymbol{Y}\boldsymbol{m}_v = \boldsymbol{0}$
  - KCL agreement: $\sum_j \boldsymbol{m}_I(ij) = 0$
  - KVL agreement: $\sum_{l \in \{\text{Loop } L\}} \boldsymbol{Y}_l \boldsymbol{m}_{I,l}$

Publication List

Journal Publications:

1. W. Zhang, **D. Duan** and L. Yang, "Relay Selection from a Battery Energy Efficiency Perspective," *IEEE Trans. on Communications*, vol. 59, no. 6, pp. 1525-1529, June 2011.
2. **D. Duan**, F. Qu, L. Yang, A. Swami and J. C. Principe, "Modulation Selection from a Battery Power Efficiency Perspective," *IEEE Trans. on Communications*, vol. 58, no. 7, pp. 1907-1911, July 2010.
3. **D. Duan**, L. Yang and J. C. Principe, "Cooperative diversity of spectrum sensing for cognitive radio systems," *IEEE Trans. on Signal Processing*, vol. 58, no. 6, pp. 3218-3227, June 2010.
4. F. Qu, **D. Duan**, L. Yang and A. Swami, "Signaling with Imperfect Channel State Information: A Battery Power Efficiency Comparison," *IEEE Trans. on Signal Processing*, vol. 56, no. 9, pp. 4486-4495, September 2008.

Publication List (cont.)

Conference Publications

1. **D. Duan**, L. Yang and L. L. Scharf, "Phasor State Estimation from PMU Measurements with Bad Data," in *Proceedings of the Fourth International Workshop on Computational Advances in Multi-Sensor Adaptive Processing*, San Juan, Puerto Rico, December 13-16, 2011 (invited)
2. **D. Duan**, F. Qu, W. Zhang and L. Yang, "Optimizing the Battery Energy Efficiency in Wireless Sensor Networks," in *Proceedings of 2011 IEEE Conference on Signal Processing, Communications and Computing*, Xi'an, China, September 14-16, 2011 (invited)
3. **D. Duan**, L. Yang and J. C. Principe, "Detection-Interference Dilemma in Reciprocal Channels," in *Proceedings of IEEE Military Communication Conference*, Boston, MA, October 18-21, 2009
4. W. Zhang, **D. Duan** and L. Yang, "Relay Selection from a Battery Energy Efficiency Perspective," in *Proceedings of IEEE Military Communication Conference*, Boston, MA, October 18-21, 2009

Publication List (cont.)

Conference Publications (cont.)

5. **D. Duan**, L. Yang and J. C. Principe, "Cooperative Diversity of Spectrum Sensing in Cognitive Radio Networks," in *Proceedings of IEEE Wireless Communications & Networking Conference*, Budapest, Hungary, April 5-8, 2009.
6. **D. Duan**, F. Qu, L. Yang, A. Swami and J. C. Principe, "Modulation Selection from a Battery Power Efficiency Perspective: A Case Study of PPM and OOK," in *Proceedings of IEEE Wireless Communications & Networking Conference*, Budapest, Hungary, April 508, 2009.
7. F. Qu, **D. Duan**, L. Yang and A. Swami, "Signaling with Imperfect Channel State Information: A Battery Power Efficiency Comparison," in *Proceedings of IEEE Military Communication Conference*, Orlando, FL, October 29-31, 2007.
8. **D. Duan**, W. Liu, P. Chen, M. Rao and J. C. Principe, "Variance and Bias Analysis of Information Potential and Symmetric Information Potential," in *Proceedings of IEEE Workshop on Machine Learning for Signal Processing*, Thessaloniki, Greece, August 27-29, 2007

Questions?

Thank you!