The Truncated SVD (40, 41 and 42 in Article 4)
Suppose the SVD of a Jacobian matrix has already been calculated out and denoted as matrix U, Sigma and V. The matrix Sigma's rank is r. If the rotation joints' angle velocity is represented as $\dot{\theta}_{max}$.
Please give the pseudocode of the truncated SVD Solution.
(Hint follow the process in Article 4 part 4.2)

Homework problem 3:

(1) When using Givens Rotations to calculate the SVD, what caused computational expense? How to solve this problem? (article 4)

(2) What is the difference between the error of the input singular vectors, singular values and the Jacobian, as compared to the error of the output singular vector? (Fig.5 in article 4)? How to eliminate the SVD Error ? (the solving procedures are needed)

Consider the RRR manipulator shown here:

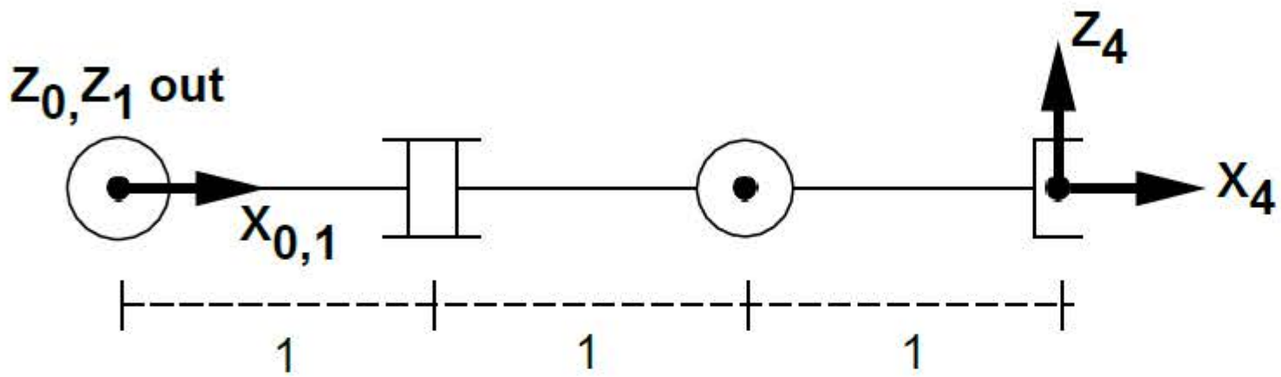

Note: in the figure, the numbers below the links represent the lengths.

Questions:

a) Find the basic complete Jacobian ^0J

b) Analyze this Jacobian with singular value decomposition, determine the diagonal matrix of the Jacobian. Could we compute the condition number in a normal way?

If not, what else conditions do we need here to get the condition number?

c) Now given that the end-effector tracking error is less than 0.2mm, determine an appropriate damping factor and a condition number for damped least square method

Q.

(a) For the two joint manipulator, with one rotary and one prismatic joint, write the 3x2 jacobian J^0.

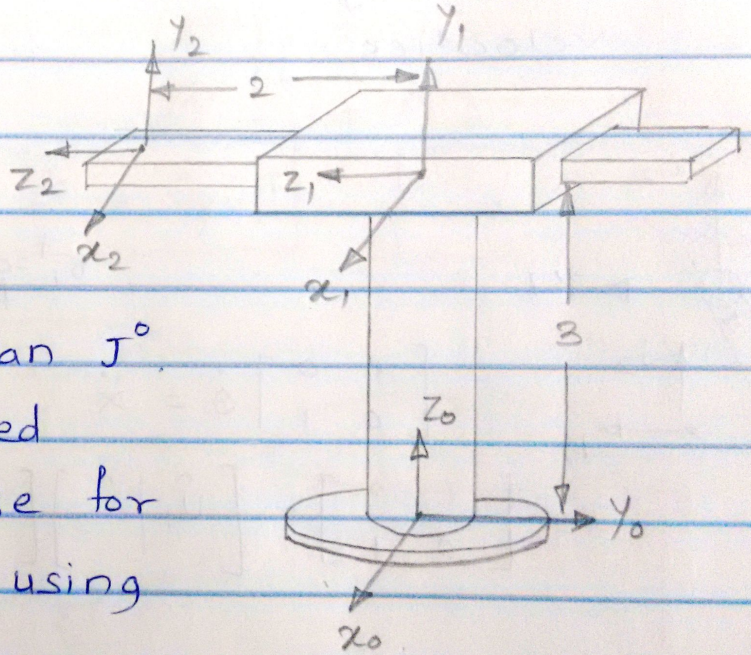

(b) Calculate the damped least squares inverse for the above jacobian using the formula,

$$J^{(\lambda)} = \sum_{i=1}^{r} \frac{\sigma_i}{\sigma_i^2 + \lambda^2} \hat{v}_i \hat{u}_i^T \quad \text{for } \lambda = 10.$$

Perform the Cholesky decomposition (find the values of all ℓ_{ij} for the $\mathcal{L}$ matrix from the decomposition of $= \mathcal{L}\mathcal{L}^T$) on the square matrix $(JJ^T + \lambda^2 I)$ given the following Jacobian and damping factor λ. Show all work and do not use the *chol()* Matlab command.

$$J(\theta) = \begin{bmatrix} 4 & 5 & 1 & 7 \\ -3 & 12 & 3 & 8 \\ 1 & 6 & 1 & 1 \end{bmatrix} \qquad \lambda = 2.64$$

Give at least one reason why one would want to use the Cholesky decomposition of the square matrix $(JJ^T + \lambda^2 I)$ when computing a solution for **z** in the following equation:

$$(JJ^T + \lambda^2 I)\boldsymbol{z} = \dot{\boldsymbol{x}}$$

1. Why is damped least square need?

2. When using damped least square, in which condition does the joint velocity reach the maximum value and what's the value? If not using the damped least square, which condition and what's the maximum value?

3. find the damped least square condition number of this matrix $\begin{bmatrix} 3 & 2 & 1 \\ -1 & 3 & 1 \end{bmatrix}$

This question uses Equation 23 in Paper 3, Numerical Filtering for the Operation of Robotic Manipulators through Kinematically Singular Configurations.

Q. 1: ..... 1 point
Given an n jointed robot manipulator, what can be said about σ_j if $a_j \approx 1$?

Q. 2: ..... 1 point
If $a_1 = a_2 = \cdots = a_n$, what can be said about the minimum singular value?

Consider the robot below:

Where:

θ_1 and θ_2 = 0, and the Tooltip is at$(2,0)$.

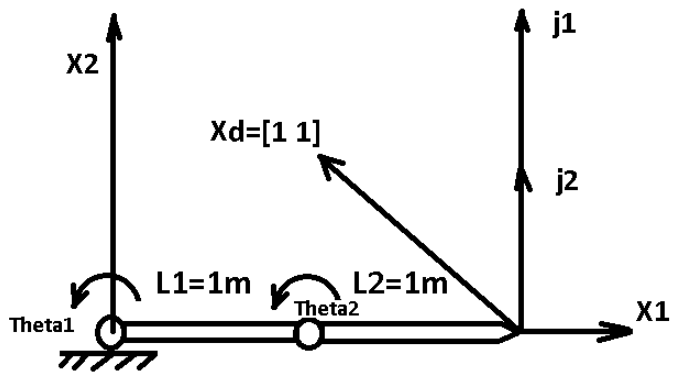

The Jacobian for the robot above is: $J = \begin{bmatrix} 0 & 0 \\ 2 & 1 \end{bmatrix}$

1. Is it possible to find $\mathbf{J^{-1}}$? If yes, please write it down including all steps.
2. Find **pseudo inverse $\mathbf{J^{+}}$.**
3. Find **DLS $\mathbf{J^{\lambda}}$** at λ=0.1 and λ=10.
4. Use DLS J^{λ} at λ=0.1 and λ=10 to find **Deltaθ** for each J^{λ} where DeltaX = $\begin{bmatrix} -1 \\ 1 \end{bmatrix}$

Hint: $\mathbf{J^{+}} = (J^T J)^{-1} J^T$

$J^{\lambda} = (J^T J + \lambda^2 I)^{-1} J^T$

Deltaθ= (J^{λ}) * (DeltaX)

Note: Solve all questions by hand. You can use MATLAB to confirm your work.

The joint velocity and the end-effector velocity of a planar 2R robot is

$$\dot{\theta} = \begin{bmatrix} \dot{\theta}_1 \\ \dot{\theta}_2 \end{bmatrix}, \quad \dot{X} = \begin{bmatrix} \dot{X}_1 \\ \dot{X}_2 \end{bmatrix}$$

The Jacobian transforms a unit circle in the joint space $\|\dot{\theta}\|_2 = \sqrt{\dot{\theta}_1^{\,2} + \dot{\theta}_2^{\,2}} = 1$ into an ellipse in the workspace.

Actually, different norms can be used to describe the unit ball (you can see more details about unit ball in Wikipedia or linear algebra textbooks) in the joint space.

1. If the maximum velocity of each joint is 1, what norm should be used to describe the unit ball in the joint space.
2. What is the shape of the unit ball in the joint space? Please draw it.
3. $\mathrm{J} = \begin{bmatrix} 0 & \frac{\sqrt{2}}{2} \\ \sqrt{2} & \frac{\sqrt{2}}{2} \end{bmatrix}$

The Jacobian transforms the unit ball (defined in question 1) in the joint space into the workspace

$\dot{\mathrm{X}} = \mathrm{J}\dot{\theta}$. (1)

Please choose several joint velocities in the until ball (defined in question 1), and calculate the end-effector velocities in the workspace by formula (1). Draw these end-effector velocities in the workspace to see the shape. (use matlab, write very short code)

a) "Damped Least Squares is very sensitive to noise". True or False?

b) Given two robotic manipulators with Jacobian (J) i) $\begin{bmatrix} 1 & 2 & 3 \\ 2 & 5 & 2 \end{bmatrix}$ ii) $\begin{bmatrix} 0.134 & -1 & 0 \\ -1.5 & -2 & -2 \\ 1 & 1 & 1 \end{bmatrix}$. Find the manipulability of these manipulators.

c) What is the limitation of Damped Least Squares? What is the effect of this limitation on end effector tracking? Explain. How can it be overcome?

Homework Problem #3

Assume the current position of the end-effector to be $P1 = \begin{bmatrix} x_1 \\ y_1 \end{bmatrix}$.
Let the desired end-effector position be $P2 = \begin{bmatrix} x_2 \\ y_2 \end{bmatrix}$. Position error $\Delta P = \begin{bmatrix} x_1 - x_2 \\ y_1 - y_2 \end{bmatrix}$

Assume you are writing a computer program to solve this using Inverse Kinematics using Damped Least Squares (DLS). DLS will give us $\Delta\theta$, a small change in configuration. We have to perform a set of these $\Delta\theta$ changes to get to point P2. In the program what is the condition you will check to know if the end-effector is in position P2 (OR) on what parameter will you perform a check (ΔP or $\Delta\theta$). Justify your answer. Explain how your choice will provide the best possible solution.

Consider a planar robot with two joints as shown in the figure below (figure (a)). Figure (b) shows the Jacobian vectors with respect to Joint 1 and Joint 2.

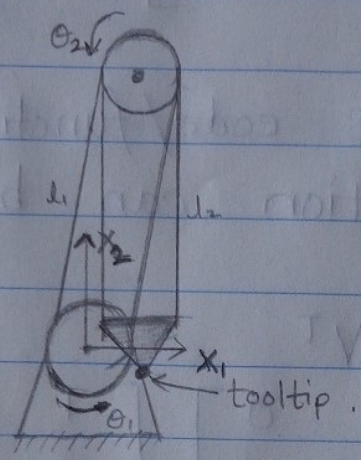

(a)

Jacobian

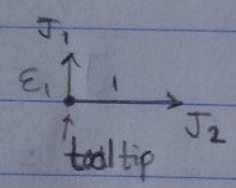

(b)

a] Write down the Jacobian matrix (J) using figure (b) in terms of ε_1.

b] What is the Singular Value Decomposition of matrix J? What are the singular values σ_1 and σ_2?

c] Suppose that at a particular position of the robot manipulator given in figure (a), we use DLS method to find the joint velocities.

- What should be the value of 'λ' in DLS equation in order to achieve maximum norm of joint velocity for joint with singular value σ_2? Also write the maximum joint velocity and plot the graph

Determine the Jacobian (2*2) of the following configuration. Present the $J^{(\lambda)}$ with variable damping factor λ. Determine $J^{(\lambda)}$ when $\lambda=0.1$, σ_{min}, σ_{Max} and plot the vectors in θ-space respectively.

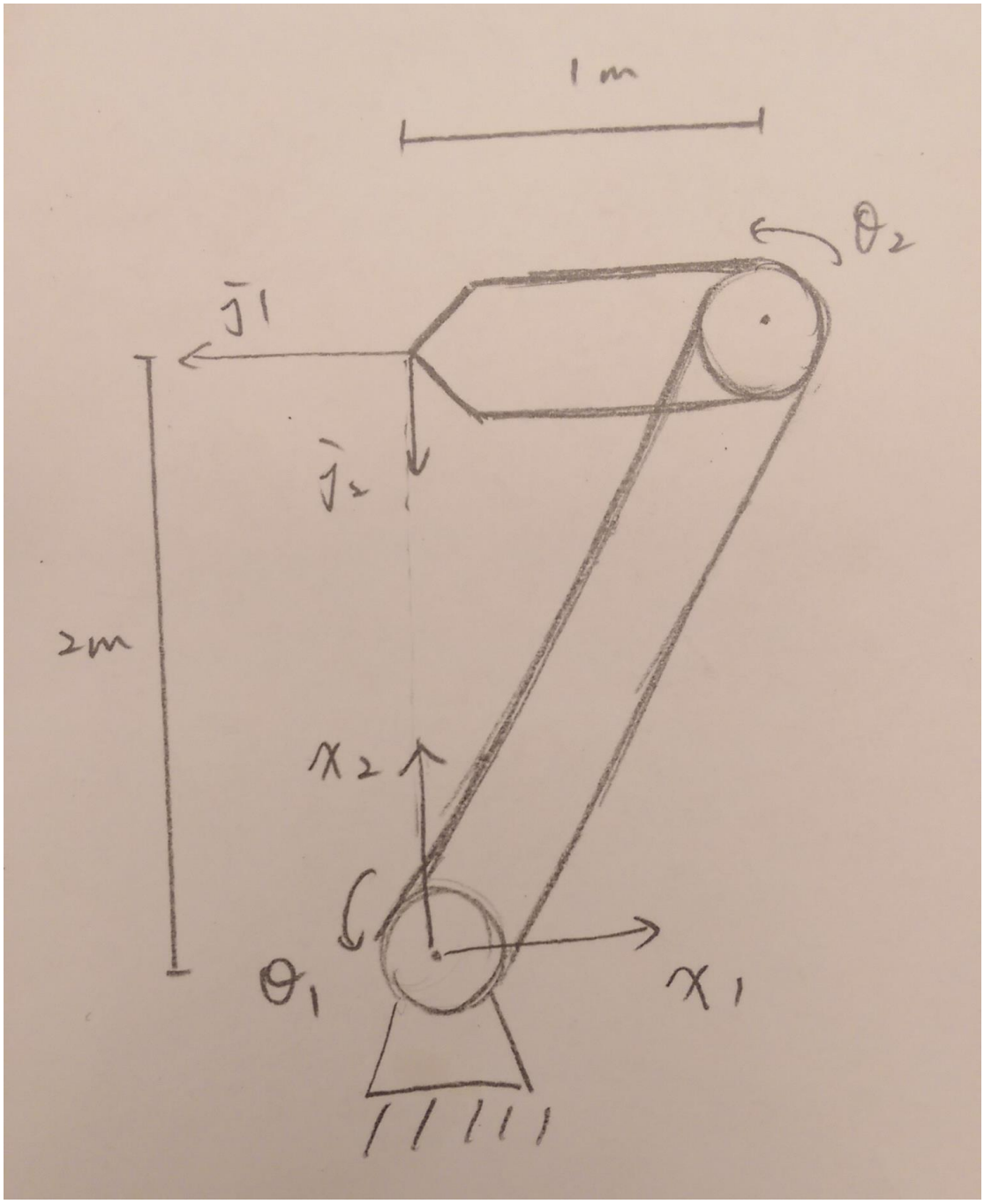

Assignment 3

① Find SVD of A

$$A = \begin{bmatrix} 1 & 1 \\ 0 & 1 \\ -1 & 1 \end{bmatrix}$$

~~② For σ_1 & σ_2 from the above problem,~~

② Consider, $\begin{bmatrix} 1 & 0 \\ 0 & 1 \end{bmatrix} \dot{\theta} = \dot{X}$

~~What is~~ $\dot{\theta}$ = Then, $\dot{\theta} = J^{+} \dot{X}$

Determine J^{+} considering $\sigma_1 = \sigma_2 = 1$ & $\lambda = 10$

What if we increase value of λ?

What is its effect on velocity in $\dot{X}$-space?

Question:

Give $\dot{X} = J\,\dot{\theta}$, and use damped least-squares method to get $\dot{\theta} = J^{(\lambda)}\dot{X}$

(a) If $J = \begin{bmatrix} \epsilon & 0 \\ 0 & 1 \end{bmatrix}$, $J^{(\lambda)} = ?$

(b) The figure of $\dot{X}$ Space as below, draw the $\dot{\theta}$ Space when ϵ is small and $\lambda = \infty$, $\lambda = 1$,

$\lambda = 0$, $\lambda \ll 1$

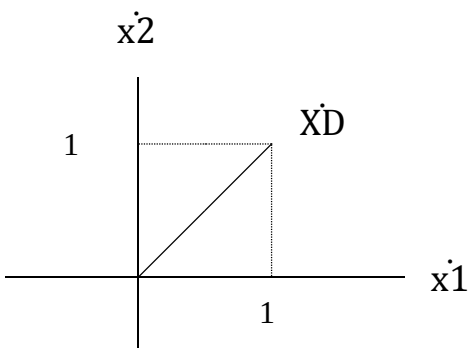

$\dot{X}$ Space

(a) Define Manipulability, Condition number, Proximity to Singularity

(b) Main advantage of Damped least Square approach over pseudo-inverse approach.

(c) For the planar arm determine the jacobian & λ at which max. norm of the joint velocity occurs and also determine that value of the joint velocity.

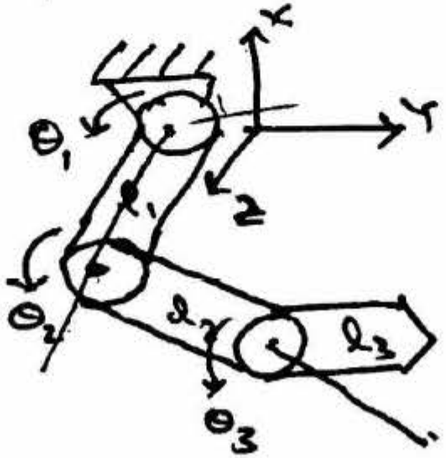

$\theta_1 = 210^\circ$ $\quad l_1 = l_2 = l_3 = 2$

$\theta_2 = 30^\circ$

$\theta_3 = 60^\circ$.

1. A three link planar robotic arm is analyzed for a given task trajectory. Resulting singular values were plotted for 80 trajectory samples. Fig. 1. Dotted line shows end effector distance from origin. Identify singular configurations for the robot and evaluate condition number at those configurations

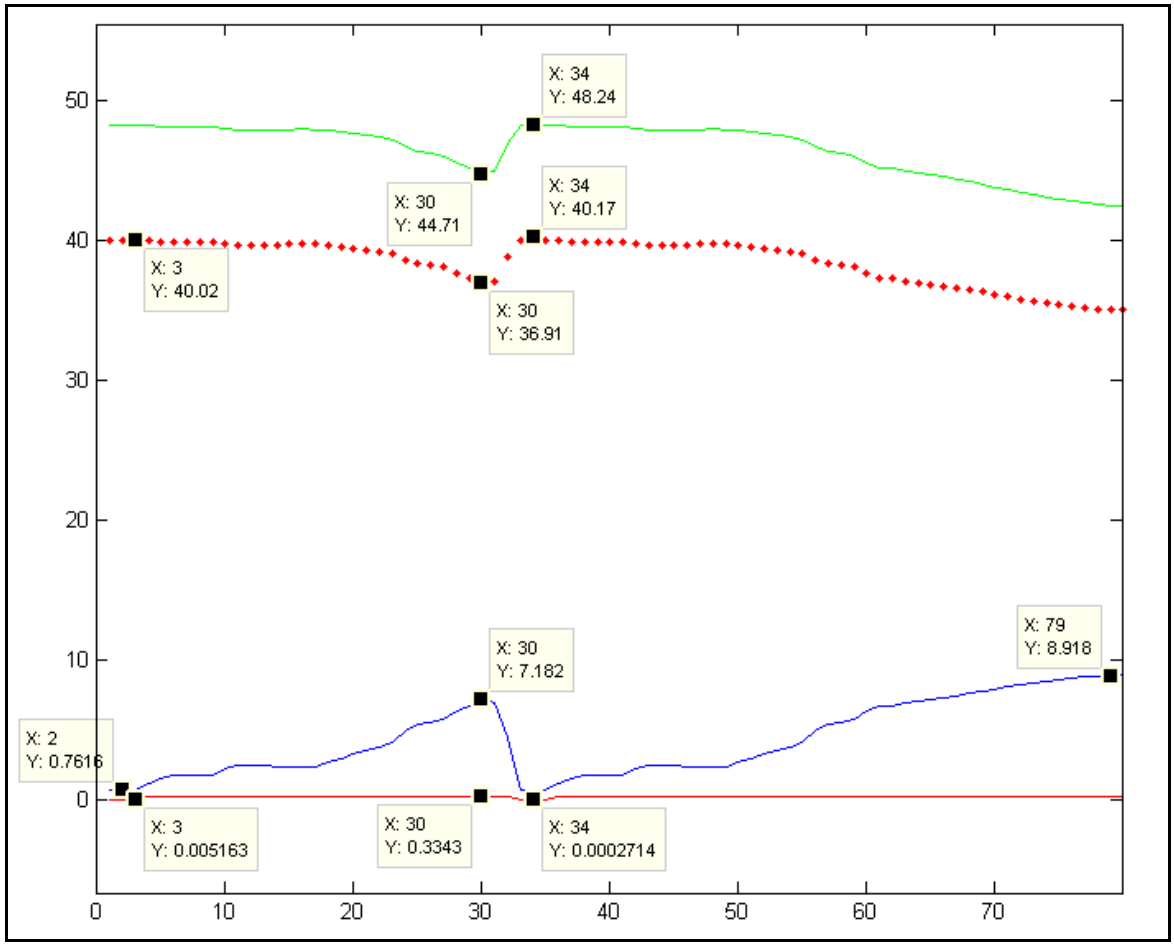

Fig. 1.