THIRST FOR POWER?
GET A SIXPAC™ TO GO.

3Φ Bridge Rectifier shown

INTRODUCING APS's SIXPAC™

Our new series of IGBT and SCR-based inverter/controller/converter power stages. Complete, including gate drive circuitry, heat sink, laminated bus, current sensing... A fast, economical power stage to get you to market ahead of your competition.

- 3Φ Converter/Controller from 100 amps to over 1,000 amps at input voltages up to 600 VAC
- Inverter circuits include half-, full-, and three-phase bridges from 50 amps to 1000 amps; bus voltages to 1kV; switching frequencies to 25kHz.

For more information:

APS Applied Power Systems, Inc.

124 Charlotte Ave., Hicksville, NY 11801, U.S.A

T: 516.935.2230 F: 516.935.2603

www.appliedps.com

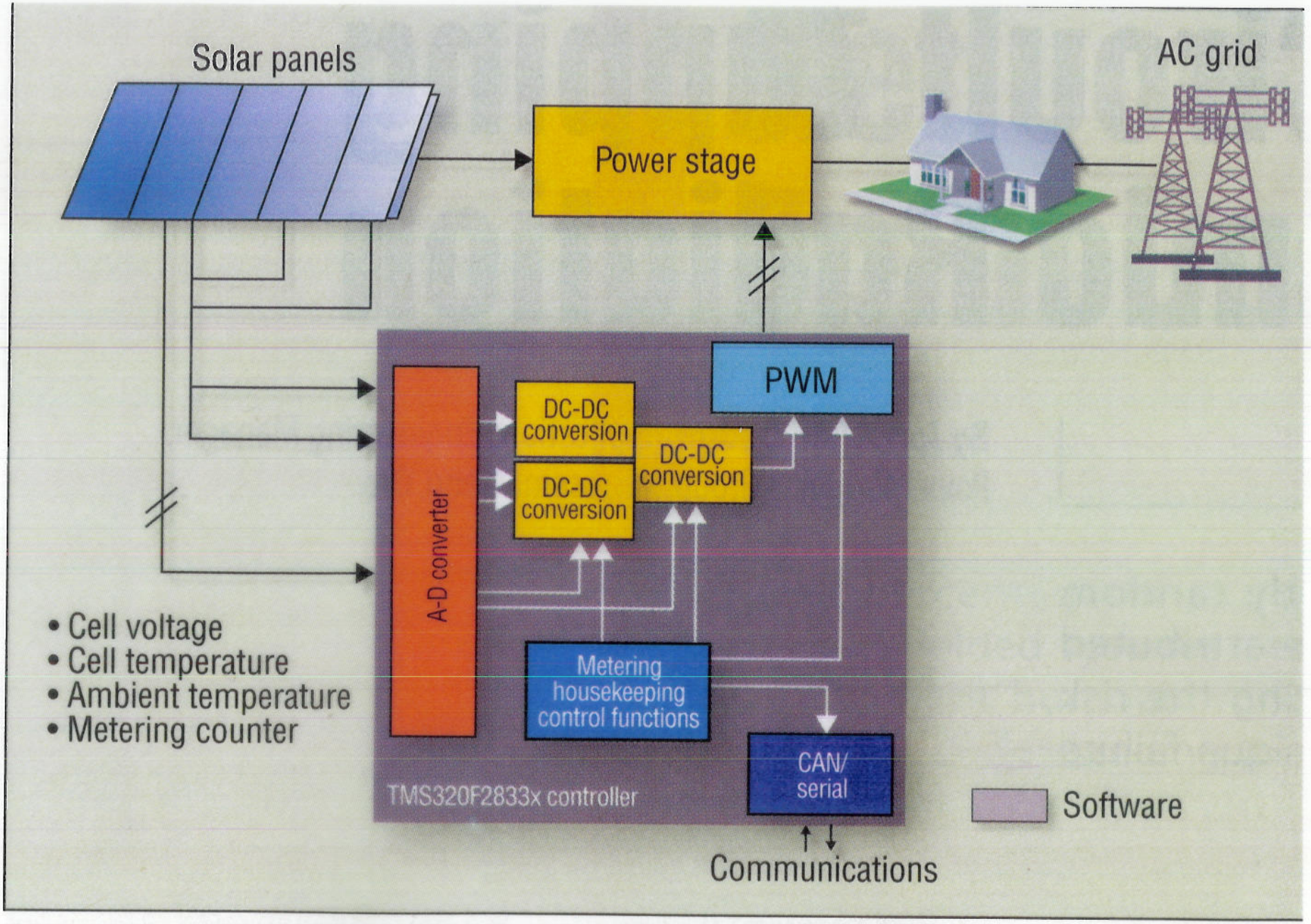

Fig. 6. *In this solar-powered system, inputs from sensors in the panel array are fed to the F2833x controller's ADCs to provide data on the instantaneous voltage and current available from the array for power conversion, to protect the panel and to enable the metering of power output from the cells.*

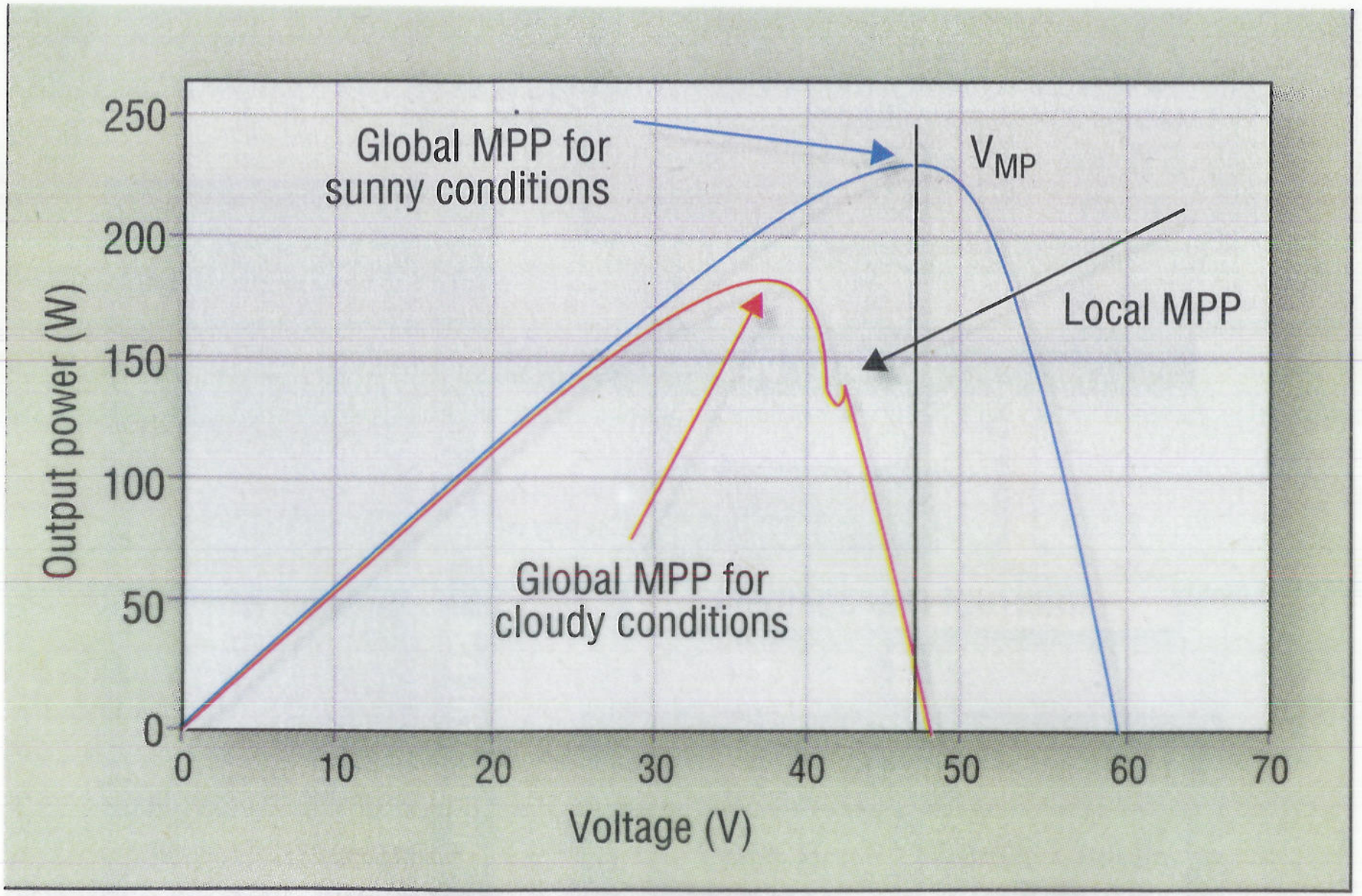

Fig. 4. *In photovoltaic systems, the maximum power point on the output of the inverter is influenced by the prevailing weather conditions, which determine the voltage produced by the photovoltaic panels.*

tput.
ntrol
which
half
high
the
units
lities
g the

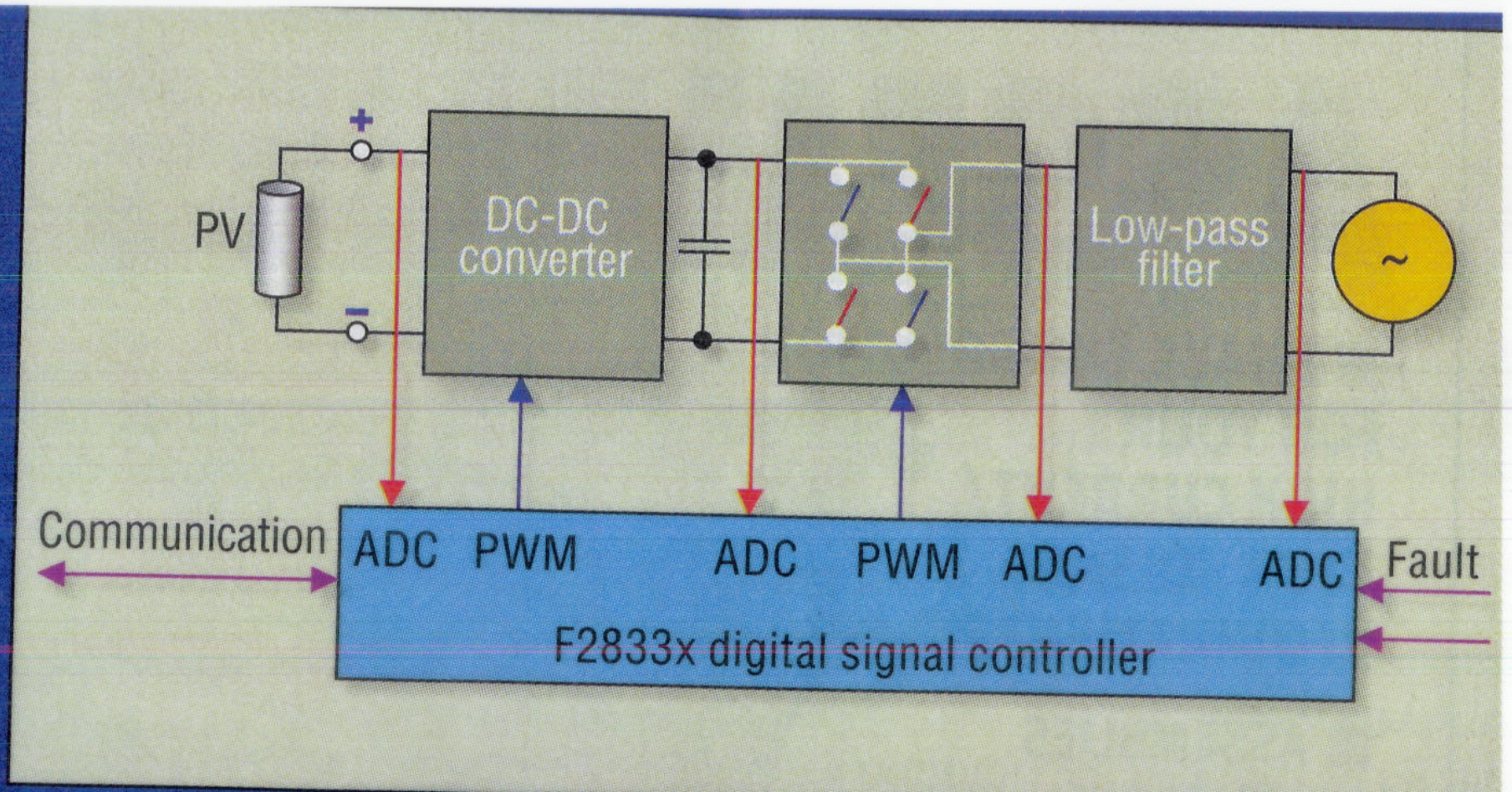

Fig. 2. *A transformerless dc-ac converter includes two PWM-controlled power stages: one to step the input voltage up or down and a second to convert that voltage to ac.*

able
oidal
ding
ngle