Lecture 8 - IIR Filters (II)

James Barnes (James.Barnes@colostate.edu)

Spring 2014

Lecture 8 Outline

- Introduction
- Digital Filter Design by Analog $\rightarrow$ Digital Conversion
- (Probably next lecture) ”All Digital” Design Algorithms
- (Next lecture) Conversion of Filter Types by Frequency Transformation

Introduction

IIR Filter Design Overview

- Methods which start from analog design
  - Impulse Invariance
  - Approximation of Derivatives
  - Bilinear Transform
  - Matched Z-transform

  All are different methods of mapping the s-plane onto the z-plane
- Methods which are ”all digital”
  - Least-squares
  - McClellan-Parks

Method: Impulse Invariance for IIR FIlters

Impulse Invariance

We start by sampling the impulse response of the analog filter:

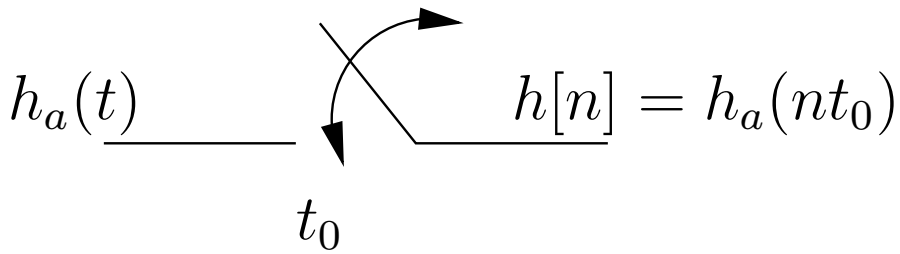

Sampling Theorem gives relation between Fourier Transform of sampled and continuous ”signals”:

$$H(z)|_{z=e^{j\omega}} = \frac{1}{t_0} \sum_{k=-\infty}^{\infty} H_a(j\frac{\omega}{t_0} - j\frac{2\pi k}{t_0}), \tag{1}$$

where $\omega = \Omega t_0 = 2\pi f / f_s$ and f is the analog frequency in Hz.

Impulse Invariance (2)

Analytic Continuation: assume eqn (1) holds true over the entire complex s and z planes. Equvalent to replacing Ω with $\frac{s}{j}$ and ω with $\frac{st_0}{j}$. Sampling the impulse response is equivalent to mapping the s-plane to the z-plane using

$$z = e^{st_0} = e^{\sigma t_0} e^{j\Omega t_0} \tag{2}$$

From the polar representation of $z = r\, e^{j\omega}$:

- The entire Ω axis of the s-plane wraps around the unit circle of the z-plane an infinite number of times;
- The negative half s-plane maps to the interior of the unit circle and the RHP to the exterior. This means stable analog filters (poles in LHP) will transform to stable digital filters (poles inside unit circle).
- This is a many-to-one mapping of strips of the s-plane to regions of the z-plane.
  - Not a conformal mapping.
  - The poles map according to $z = e^{st_0}$, but the zeros <u>do not</u>

Impulse Invariance (3)

Mapping

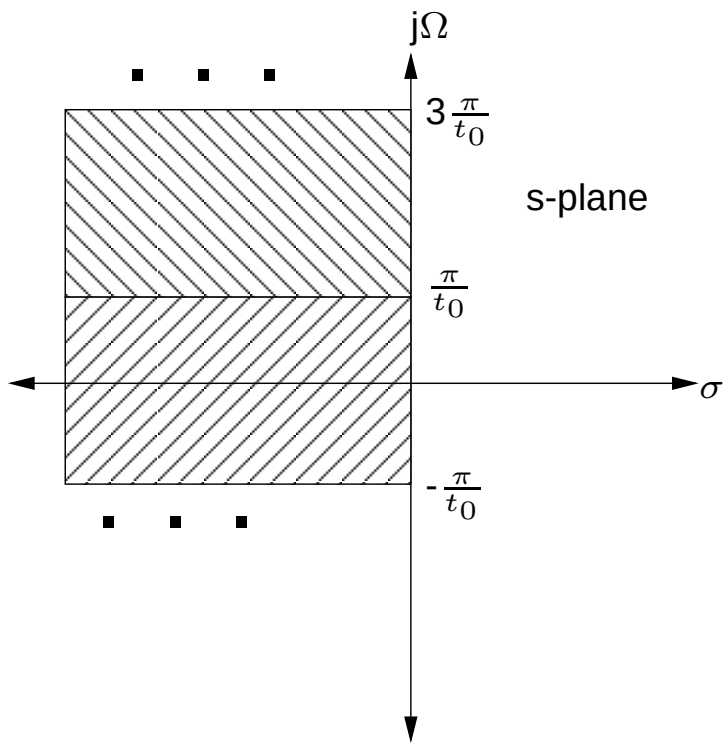

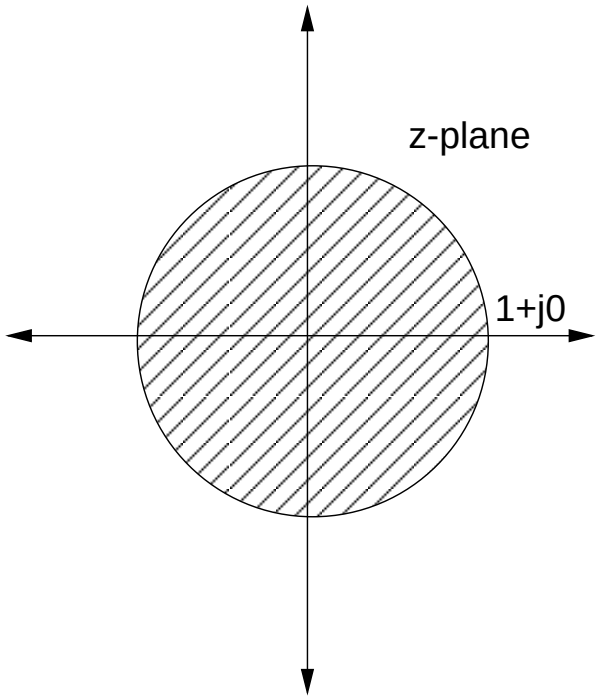

Impulse Invariance (4)

Limitation of Impulse Invariance: overlap of images of the frequency response. This prevents it from being used for high-pass filter design

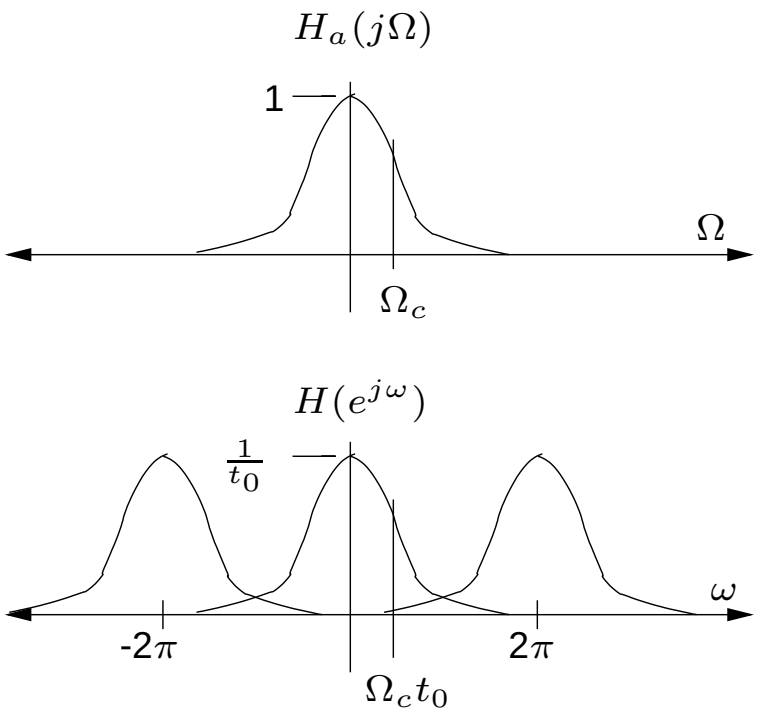

Advantage of Impulse Invariance: linear translation between Ω and ω - preserves shape of filter frequency response.

Impulse Invariance Procedure

How do we use Impulse Invariance for IIR filter design? Start with Partial Fraction Expansion of Analog Filter, where $\alpha_k$are the pole locations. *NOTE: IN THIS AND MOST OF THE FOLLOWING, IT IS ASSUMED THAT ALL POLES ARE FIRST-ORDER (NOT MULTIPLE).*

$$H_a(s) = \sum_{k=1}^{N} \frac{A_k}{s - \alpha_k} \Rightarrow h_a(t) = \sum_{k=1}^{N} A_k e^{\alpha_k t} u(t) \tag{3}$$

and the sampled impulse response is

$$h[n] = h_a(nt_0) = \sum_{k=1}^{N} A_k e^{\alpha_k n t_0} u[n] \tag{4}$$

with discrete-time transfer function

$$H(z) = \sum_{k=1}^{N} \frac{A_k}{1 - e^{\alpha_k t_0} z^{-1}} \tag{5}$$

Impulse Invariance Example

Let $H_a = \frac{s+a}{(s+a)^2+b^2}$. This filter has a zero at β=-a and poles at $\alpha_k = -a \pm jb$. The partial fraction expansion is

$$H_a(s) = \frac{1/2}{s+a+jb} + \frac{1/2}{s+a-jb}. \tag{6}$$

The corresponding discrete-time filter has a transfer function given by

$$H(z) = \frac{1/2}{1-e^{-(a-jb)t_0}z^{-1}} + \frac{1/2}{1-e^{-(a+jb)t_0}z^{-1}}, \tag{7}$$

or

$$H(z) = \frac{B(z)}{A(z)} = \frac{1-e^{-at_0}cos(bt_0)\,z^{-1}}{1-2e^{-at_0}cos(bt_0)\,z^{-1}+e^{-2at_0}\,z^{-2}} \tag{8}$$

Impulse Invariance Example (2)

Pole and Zero Locations

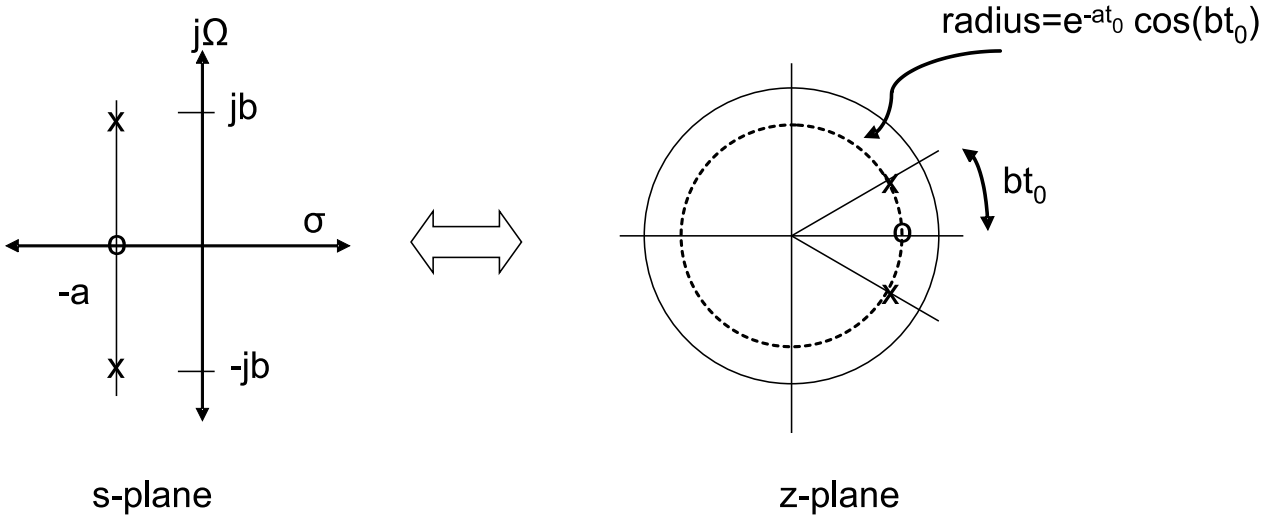

Approximation of Derivatives

Method: Approximation of Derivatives

This explanation is a plausibility argument, not a rigorous proof.

Start with an analog filter with system function $H(s)$ expressed in rational form with constant coefficients:

$$H(s) = \frac{\sum_{k=0}^{M} \beta_k s^k}{\sum_{k=0}^{N} \alpha_k s^k}. \tag{9}$$

In the time domain, this is equivalent to the differential equation

$$\sum_{k=0}^{M} \alpha_k \frac{d^k y(t)}{dt^k} = \sum_{k=0}^{N} \beta_k \frac{d^k x(t)}{dt^k}. \tag{10}$$

But we can approximate a derivative by a backward difference:

$$\frac{dy(t)}{dt}\Big|_{t=nt_0} \cong \frac{y(nt_0) - y(nt_0 - t_0)}{t_0} = \frac{y[n] - y[n-1]}{t_0}. \tag{11}$$

Approximation of Derivatives (2)

The left hand and right hand sides of eqn(11) represent a continuous time and discrete time system which are supposed to be equivalent:

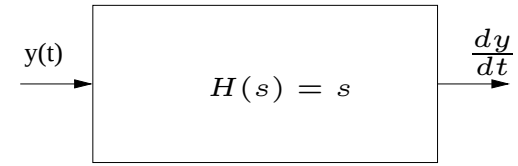

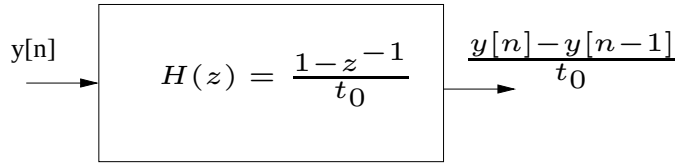

For both systems to be equivalent, we must have the following mapping:

$$s = \frac{1 - z^{-1}}{t_0}. \tag{12}$$

This relationship between s and z holds for all orders of the derivative, with s replaced by s^k and the first order difference replaced by the k-th order difference. Hence it holds for the system described by eqn (10).

Approximation of Derivatives (3)

Solving previous for z:

$$z = \frac{1}{1 - st_0} \tag{13}$$

This is one mapping between the s and z-planes. It maps the entire LH plane of the s-plane into a circle centered at z=[1/2,0] and radius 1/2. It is not a useful mapping if you want to create a digital filter with poles in other regions inside the unit circle. However, there is no aliasing.

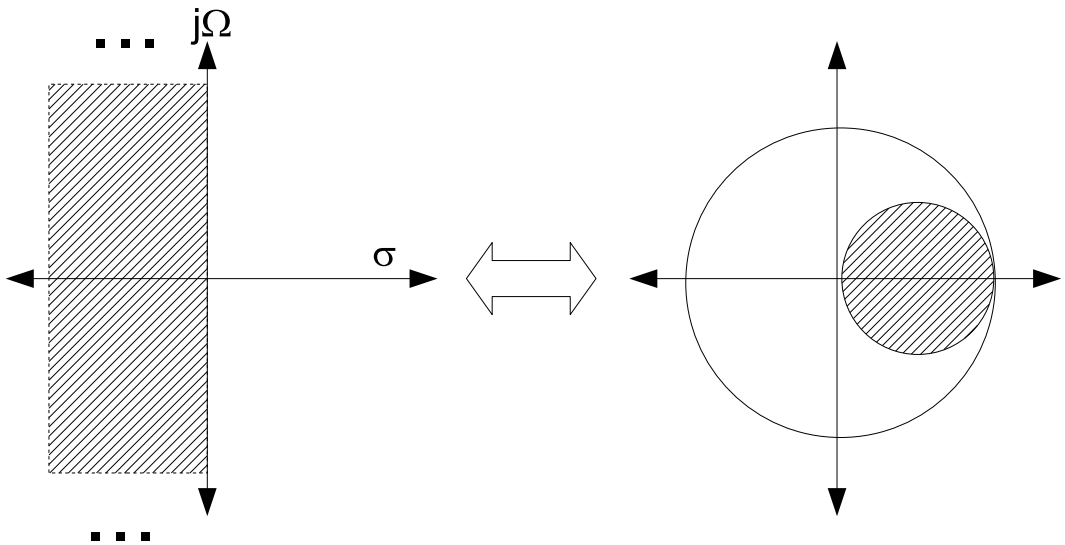

Bilinear Transform

Method: Bilinear Transform

BLT is the standard method for designing digital filters ”by hand”. Like the previous method (Approximating Derivatives), it is based on an approximate solution of the continuous-time equation (11), but instead of approximating the derivative(s), it approximates integrals using the Trapezoidal Rule.

Consider the system

$$c_1 y_a'(t) + c_0 y_a(t) = d_0 x(t), \tag{14}$$

with system function $H(s)$ given by:

$$H_a(s) = \frac{d_0}{c_1 s + c_0}. \tag{15}$$

Express $y_a(t)$ as an integral of $y_a'(t)$:

$$y_a(t) = \int_\tau^t y_a'(t)\, dt \; + y_a(\tau), \tag{16}$$

and let $t = nt_0$ and $\tau = (n-1)t_0$.

Bilinear Transform (2)

Then (see Oppenheim and Schafer), using the Trapezoidal Rule to approximate the integral, (16) can be written:

$$y_a(nt_0) = y_a((n-1)t_0) + \frac{t_0}{2}[y'_a(nt_0) + y'_a((n-1)t_0). \tag{17}$$

Substituting for $y'_a(nt_0)$ from equation (14) and using $y[n] = y(nt_0)$, we have :

$$(y[n] - y[n-1]) = \frac{t_0}{2}[-\frac{c_0}{c_1}(y[n] + y[n-1]) + \frac{d_0}{c_0}(x[n] + x[n-1])]. \tag{18}$$

Taking the z-transform of this equation and using the fact that $Z\{y[n-1]\} = z^{-1}Y(z), ...$, we get

$$H(z) = \frac{Y(z)}{X(z)} = \frac{d_0}{c_1 \frac{2}{t_0} \frac{1-z^{-1}}{1+z^{-1}} + c_0}. \tag{19}$$

Bilinear Transform - Pre-warping

Comparing (19) to (15): $H(z) = H_a(s)|_{s=\frac{2}{t_0}\frac{1-z^{-1}}{1+z^{-1}}}$, i.e. the discrete-time transform will equal the continuous time transform if

$$s = \frac{2}{t_0}\frac{1-z^{-1}}{1+z^{-1}}. \tag{20}$$

Substituting $s = j\Omega$ and $z = e^{j\omega}$ and using the definition

$$tan(x) = \frac{sin(x)}{cos(x)} = j\frac{e^{jx} - e^{-jx}}{e^{jx} + e^{-jx}}, \tag{21}$$

we get the following relation between Ω and ω :

$$\Omega = \frac{2}{t_0}tan(\frac{\omega}{2}). \tag{22}$$

Bilinear Transform - Pre-warping (2)

The relation between Ω and ω and the mapping between s- and z-planes are shown below:

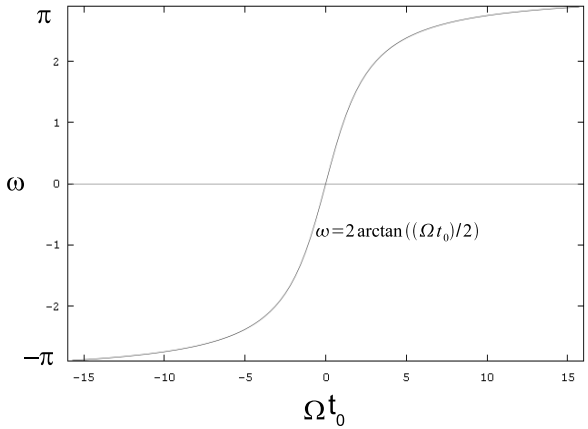

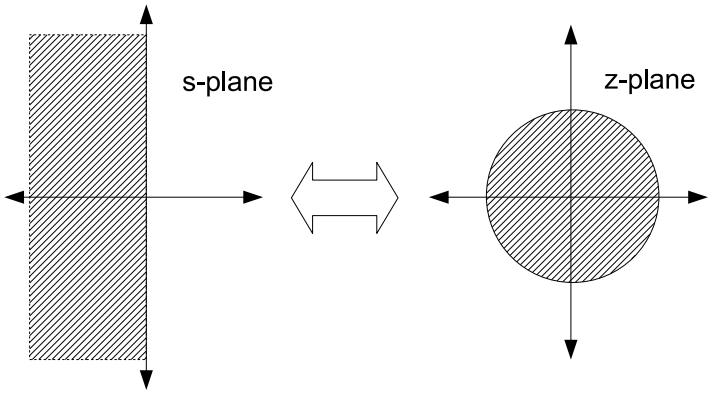

Note that the bilinear transform maps the entire left-hand s-plane to the interior of the unit circle of the z-plane, and that higher frequencies along the $j\Omega$ axis are compressed compared with frequencies near 0.

Design Example for Second Order Section

A second-order analog filter section has a transfer function given by

$$H_a(s) = \frac{\Omega_n^2}{s^2 + 2\zeta\Omega_n s + \Omega_n^2}, \tag{23}$$

where $\Omega_n$is the natural frequency and ζ is the damping constant. $\zeta < 1$ is underdamped and $\zeta > 1$ is overdamped. For small values of ζ, the system has two poles at $\alpha_{1,2} = -\zeta\Omega_n \pm j\Omega_n$, i.e. the filter will ring and have a peak response at frequency Ω_n.

Assuming we want to design a digital filter with a peak response at ω_n, we first need to determine what Ω_n is needed using (22). Then we can substitute for s in the equation for $H_a(s)$ using (20).

Second-order Section (2)

One direct solution (messy, not as pretty as the next one):

$$H(z) = G\,\frac{B(z)}{A(z)} = \frac{\Gamma^2}{\Gamma^2 + 4\Gamma\zeta + 4}\,\frac{1 + 2z^{-1} + z^{-2}}{1 + 2\frac{(\Gamma^2-4)}{\Gamma^2+4\Gamma\zeta+4}z^{-1} + \frac{\Gamma^2-4\Gamma\zeta+4}{\Gamma^2+4\Gamma\zeta+4}z^{-2}}, \tag{24}$$

Where $\Gamma = \Omega_n t_0$ is the pre-warped discrete-time natural frequency and G is the ”gain factor”. This solution doesn’t explicitly show the pole locations (and probably could be simplified), but it is in the form such that a filter section could be implemented.

Second-order Section (3)

Mike's nicer direct solution: after some algebra, we get the digital filter transfer function

$$H(z) = \frac{B(z)}{A(z)} = G\,\frac{(1+z^{-1})(1+z^{-1})}{(1-pz^{-1})(1-p^{*}z^{-1})}, \tag{25}$$

where the gain G is given by

$$G = \frac{tan^2(\Omega_n t_0/2)}{1+2\zeta tan(\Omega_n t_0/2)+tan^2(\Omega_n t_0/2)} \tag{26}$$

and the pole location is given by

$$p = \frac{1-tan(\Omega_n t_0/2)e^{jcos^{-1}(\zeta)}}{1+tan(\Omega_n t_0/2)e^{jcos^{-1}(\zeta)}} \tag{27}$$

Alternative to The Previous Two Slides: Matlab

"Syntax

```
[zd,pd,kd] = bilinear(z,p,k,fs)
[zd,pd,kd] = bilinear(z,p,k,fs,fp)
[numd,dend] = bilinear(num,den,fs)
[numd,dend] = bilinear(num,den,fs,fp)
[Ad,Bd,Cd,Dd] = bilinear(A,B,C,D,fs)
[Ad,Bd,Cd,Dd] = bilinear(A,B,C,D,fs,fp)
```

Description

The bilinear transformation is a mathematical mapping of variables. In digital filtering, it is a . . . "

http://www.mathworks.com/help/signal/ref/bilinear.html

What to Do Now? (Reminder from Lecture 7)

Input a and b coefficients into this (Direct Type II) or other configuration (Type I, Transposed Type II)

$$H(z) = H_2(z)H_1(z) = \frac{1}{A(z)}B(z) \tag{28}$$

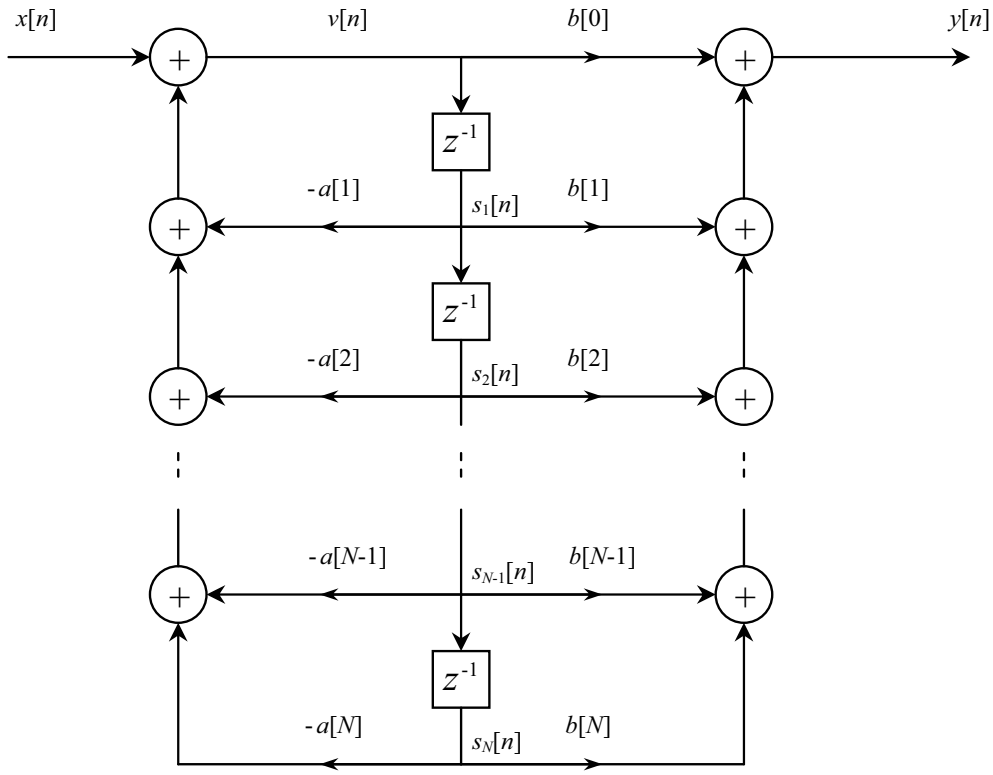

Matched Z-Transform

Method: Matched Z-Transform

This method directly maps the poles and zeros of an analog filter directly into poles and zeros of the z-plane. We start with the transfer function of the analog filter in factored form:

$$H_a(s) = \frac{\prod_{k=1}^{M}(s - z_k)}{\prod_{k=1}^{N}(s - p_k)}. \tag{29}$$

The transfer function of the equivalent digital filter is obtained by replacing terms of the form $(s - a)$ with $(1 - e^{at_0} z^{-1})$. This is called a 'matched z' transform and gives the same pole location as impulse invariance but different zero location.

Summary of Analog $\rightarrow$ Digital Transformation

Technique	Mapping	+/-
Impulse Invariance	$z = e^{st_0}$	+ Preserves shape of filter; - Aliasing
Approximation of Derivatives	$s = \frac{1-z^{-1}}{t_0}$	+ No aliasing; - Restricted pole location, shape distortion
Bilinear Transform	$s = \frac{2}{t_0}\frac{1-z^{-1}}{1+z^{-1}}$	+ No aliasing; - Shape distortion
Matched Z transform	$(s-a) \rightarrow (1-e^{at_0})$	+ Directly maps pole and zero locations; - Aliasing